ORDER NO. EMID901305
A4

Service Manual

PCM Digital Ensemble

SX-PR350

(M), (MC), (XM), (EN), (EH), (EF), (EZ), (EW), (EA), (EP), (EK), (XL), (XR), (XS), (XD), (X)

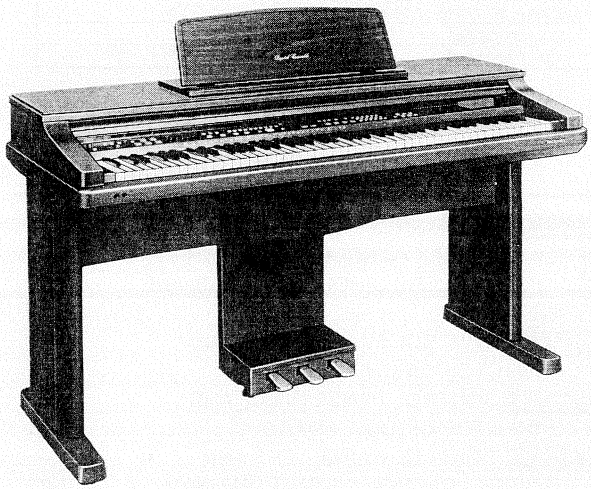

AREAS

(M):	U.S.A.	(EK):	the United Kingdom
(MC):	Canada	(XL):	New Zealand
(XM):	Mexico	(XR):	Australia
(EN):	Norway, Sweden, Denmark, Finland	(XS):	Malaysia, Singapore, South Africa
(EH):	Holland	(XD):	Saudi Arabia
(EF):	France, Italy, Belgium	(X):	the Middle East, Indonesia, Hong Kong, the Philippines, Thailand, Taiwan
(EZ):	Germany		
(EW):	Switzerland		
(EA):	Austria		
(EP):	Spain		

Specifications

KEYBOARD		88 KEYS
SOUND GENERATOR		PCM
MAXIMUM NUMBER OF NOTES PRODUCED SIMULTANEOUSLY		32 NOTES (A MAXIMUM OF 16 SIMULTANEOUSLY PRESSED KEYS CAN BE INPUT.)
SOUND SELECT	PIANO	GRAND PIANO, UPRIGHT PIANO, E PIANO 1, E PIANO 2
		E GRAND, HARPSICHORD, MALLET, GUITAR, ELECTRIC GUITAR, SYNTH, BRASS, SYNTH BRASS, TRUMPET, SAX, REED, FLUTE, ORGAN, STRINGS, VOCAL, ACOUSTIC BASS, ELECTRIC BASS, CHOPPER BASS (WITH VARIATION FOR EACH SOUND)
KEY SPLIT		○ (G2, C3, C4)
PEDAL		SUSTAIN, SOSTENUTO, SOFT
DIGITAL CELESTE		○ (1, 2)
DIGITAL REVERB		○ (ROOM, STAGE, HALL)
TRANSPOSE		○ (G~C~F')
RHYTHM	RHYTHM SELECT	MARCH, COUNTRY, WALTZ, SWING 1, SWING 2, DIXIE, JAZZ WALTZ, LATIN1, LATIN2, BOSSA NOVA, 8 BEAT, ROCK'N'ROLL, SHUFFLE, ROCK BALLAD, 16 BEAT 1, 16 BEAT 2, JAZZ ROCK, SWING ROCK, DISCO, LATIN ROCK (WITH VARIATION FOR EACH RHYTHM)
	CONTROL	START/STOP, SYNCHRO START, COUNT & FILL IN, INTRO & ENDING, TEMPO
	KEYBOARD PERCUSSION	34 KEYS
METRONOME		○ (1, 2)
ONE TOUCH PLAY		○
AUTO PLAY CHORD		BASIC SPLIT, ADVANCED SPLIT, PIANIST, PIANIST ACCOMP, ACCOMP PART 1, 2, 3
PANEL MEMORY		SET, 1~6
SEQUENCER		STORAGE CAPACITY: APPROX 7400 NOTES
		8 PARTS (RIGHT, LEFT, BASS, ACCOMP/CHORD 1, ACCOMP 2, 3, DRUMS, CONTROL) INPUT MODES: REAL TIME, STEP (ACCOMP 1/CHORD ONLY) EDIT FUNCTIONS: TRACK CLEAR, SONG CLEAR
COMPOSER		STORAGE CAPACITY: APPROX 1300 NOTES 5 PARTS (BASS, ACCOMP 1, 2, 3, DRUMS) MEMORY: 1~8 EDIT FUNCTIONS: COMPOSER CLEAR, BEAT, QUANTIZE, PERC ERASE (DRUMS ONLY)
DISPLAY		○
DEMO		○
CONTROL		MAIN VOLUME, BALANCE, TRANSPOSE/PROGRAM, MIC VOLUME
TUNING		○ (± 50 CENTS)

Technics

Matsushita Electric Industrial Co., Ltd.
Central P.O. Box 288, Osaka 530-91, Japan

Matsushita Services Company
Division of Matsushita Electric Corporation of America
50 Meadowland Parkway,
Secaucus, New Jersey 07094

Panasonic Sales Company,
Division of Matsushita Electric of Puerto Rico, Inc.
San Gabriel Industrial Park
65th Infantry Ave. Km. 9.5
Carolina, P.R. 00630

MIDI	CHANNEL, OCTAVE SHIFT, LOCAL CONTROL, P. MEM P-CHANGE, START/STOP, MIDI CLOCK, SONG SELECT, MIDI LOAD, INPUT MODE, P-CHANGE MODE, NOTE ONLY, MIDI OUT, EXT SEQ MODE
OTHERS	OCTAVE SHIFT, REVERB DEPTH, ACCOMP VOLUME, PIANO TUNING, TOUCH SENSITIVITY, PEDAL SETTING, P. MEM EXPAND, MIN RANGE, MEDLEY, DISK FORMAT, INITIAL
EXTERNAL MEMORY	DIGITAL DISK RECORDER
TERMINALS	HEADPHONE TERMINALS x 2, LINE OUT, AUX IN, MIDI (IN, THRU, OUT), MIC
OUTPUT	50 W x 2
SPEAKERS	16 cm x 2, 6.5 cm x 2, MONITOR SPEAKER x 2
POWER REQUIREMENT	275 W 290 VA (CANADA), 195 W (U.S.A. AND MEXICO)
	AC120/220/240 V 50/60 Hz, AC120 V 60 Hz (NORTH AMERICA AND MEXICO) AC220 V 50/60 Hz (NEDERLANDS)
DIMENSIONS (WXHXD)	145.3 cm x 83.6 cm x 59.2 cm (57-7/32" x 32-29/32"x 23-5/16")
NET WEIGHT	82 kg (180.8 lbs.)
ACCESSORIES	STAND, AC CORD

CONTENTS

■ **PART I (INTRODUCTION)**

SAFETY PRECAUTION I-1
ARRANGEMENT OF CONTROL PANEL I-2
BASIC FUNCTIONS I-2
CONNECTION TERMINALS I-4
KEYBOARD RANGES I-5
OPTIONS I-5
HOW TO ASSEMBLE THE PIANO I-6
DISASSEMBLY INSTRUCTIONS I-7
PARTS LOCATION I-9
MEASUREMENTS AND ADJUSTMENTS I-10
SYMPTOMS WHICH APPEAR TO BE SIGNS OF TROUBLE I-11
ERROR DISPLAY I-13
MIDI IMPLEMENTATION CHART I-14
PRECAUTIONS BEFORE SERVICING I-16

■ **PART II (SCHEMATIC DIAGRAM)**

WIRING CONNECTION DIAGRAM II-1
BLOCK DIAGRAM II-3
MAIN HP MIC MAIN, HEADPHONES AND MICROPHONE CIRCUIT BOARD II-6
MAIN HP MIC MAIN, HEADPHONES AND MICROPHONE CIRCUIT DIAGRAM II-9
AS ACP PC AMP & POWER SUPPLY, AC POWER SUPPLY AND PEAK CANCELLER CIRCUIT II-13
DRV DIGITAL REVERB CIRCUIT DIAGRAM AND CIRCUIT BOARD II-17
CPR FDCN CONTROL PANEL RIGHT AND FD CONNECTOR CIRCUIT DIAGRAM II-20
CPR FDCN CONTROL PANEL RIGHT AND FD CONNECTOR CIRCUIT BOARD II-23
CPL CPSQ CONTROL PANEL LEFT AND SEQUENCER CONTROL CIRCUIT DIAGRAM II-26
CPL CPSQ CONTROL PANEL LEFT AND SEQUENCER CONTROL CIRCUIT BOARD II-29
MKB1 MKB2 MANUAL KEYBOARD 1, 2 CIRCUIT DIAGRAM AND CIRCUIT BOARD II-32
FDC FD CONTROL CIRCUIT II-35

■ **PART III (REPLACEMENT PARTS LIST)**

REPLACEMENT PARTS LIST (P.C.B. and Wiring Parts) III-1
EXPLODED VIEWS OF CABINET III-8
REPLACEMENT PARTS LIST (Cabinet and Chassis Parts) III-10
PACKING III-12

SAFETY PRECAUTION (This "safety precaution" is for the U.S.A. only)

• Safety Precaution

1. Before servicing, unplug the power cord to prevent an electric shock.
2. When replacing parts, use only the manufacturer's recommended components for safety.
3. Check the condition of the power cord. Replace if wear or damage is evident.
4. After servicing, be sure to restore the lead dress, insulation barriers, insulation papers, shields, etc.
5. Before returning the serviced equipment to the customer, be sure to make the following insulation resistance test to prevent the customer from being exposed to a shock hazard.

• Insulation Resistance Test

1. Unplug the power cord and short the two prongs of the plug with a jumper wire.
2. Turn on the power switch.
3. Measure the resistance value with an ohmmeter between the jumpered AC plug and each exposed metal cabinet part, such as screw heads, connectors, control shafts, handle brackets, etc. Measurements should range from 4 MΩ to infinity for all exposed parts.

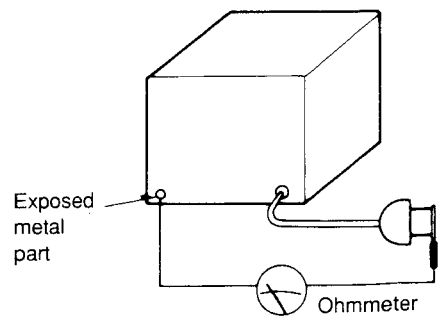

Resistance=4 MΩ to ∞

ARRANGEMENT OF CONTROL PANEL

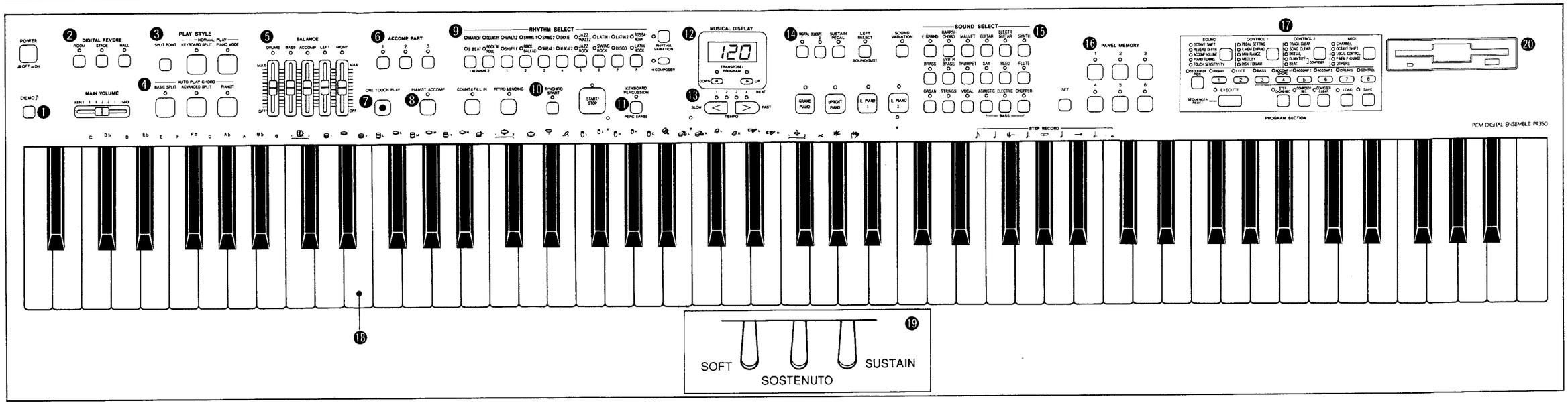

BASIC FUNCTIONS

❶ DEMO ♪
Pre-recorded performances are used to demonstrate the individual appeal of each basic rhythm and sound.

❷ DIGITAL REVERB
Select from three reverberation effects—**ROOM**, **STAGE** and **HALL**—to apply to the sound.

❸ PLAY STYLE
When playing as a piano, select either a conventional keyboard or a split keyboard. The location of the split point can be set at G2, C3 or G3 with the **SPLIT POINT** button.

❹ AUTO PLAY CHORD
When you play a chord on the keyboard, an accompaniment pattern which matches the selected rhythm is automatically produced. Select from three modes, according to your level of expertise.

❺ BALANCE
The volumes for the **DRUMS**, **BASS**, **ACCOMP**, **LEFT** and **RIGHT** parts are adjusted with their respective **BALANCE** controls.

❻ ACCOMP PART
The **AUTO PLAY CHORD** automatic accompaniment is comprised of three **ACCOMP** parts—**1**, **2** and **3**—which you can turn on and off individually.

❼ ONE TOUCH PLAY
With this special feature, you select a rhythm, and appropriate sounds and effects are automatically set in seconds.

❽ PIANIST ACCOMP
This is a totally new feature which automatically regulates the sound and rhythms of the **AUTO PLAY CHORD** accompaniment so that your piano performance stands out.

❾ RHYTHM SELECT
Various automatic rhythm patterns are stored in the permanent memory, for each of which a **RHYTHM VARIATION** is available. Two **METRONOME** types are also available.

❿ Rhythm control
The **COUNT & FILL IN** button is used to begin with a one-measure count or to insert a fill-in pattern during the rhythm performance. Use the **INTRO & ENDING** button to start a song with an intro pattern or finish with an ending pattern. **START/STOP** is used to start and stop the rhythm instantly. Or turn on the **SYNCHRO START** button to start the rhythm by pressing a key on the left side of the keyboard. Regulate the speed of the automatic rhythm with the **TEMPO** buttons. **BEAT** indicators light to show the beat.

⓫ KEYBOARD PERCUSSION
One press of the **KEYBOARD PERCUSSION** button transforms your keyboard into a whole band of percussive instruments and special sounds. The keys are picture-coded for quick and easy selection.

⓬ MUSICAL DISPLAY
During the normal performance mode, the tempo is displayed. During other modes, the **MUSICAL DISPLAY** is a multi-function indicator, used when setting the transposed key, to show the remaining memory in the **SEQUENCER** or **COMPOSER**, when setting the time signature or **QUANTIZE** level for the **COMPOSER**, when adjusting or selecting various programmable functions, and to show various messages when using the Digital Disk Recorder.

⓭ TRANSPOSE
C is the standard setting, but you can raise or lower the key of the entire keyboard in semi-tone steps across an entire octave.

⓮ EFFECTS
DIGITAL CELESTE gives the sound a thickness and diffusion; **SUSTAIN PEDAL** controls the enable/disable status of the sustain pedal.

⓯ SOUND SELECT
Select from four piano-type sounds when playing as a standard piano, or choose one of the many non-piano sounds. A **SOUND VARIATION** is available for each non-piano sound.

⓰ PANEL MEMORY
Set the desired sounds, effects, split point, volume settings, rhythm, tempo, etc. with the panel controls. Then store the panel settings in one of the programmable memories. Then while you play, the touch of one button recalls the panel settings instantly.

⓱ PROGRAM SECTION
Open the sliding cover to use the multi-purpose **PROGRAM SECTION**. These buttons are used when setting the functions for the **SEQUENCER**, **COMPOSER** or MIDI, when using some of the Digital Disk Recorder functions, and when custom-setting any of the numerous programmable functions.

⓲ Keyboard
This keyboard features Touch Response, by which you control the volume by playing the keys harder or softer.

⓳ Pedals
The sustain pedal and sostenuto pedal apply sustain effects, and the soft pedal works as a damper.

⓴ Digital Disk Recorder
The Digital Disk Recorder allows you to store up to 20 performances on a memory disk.

Initialization

The following procedure resets all programmable settings, functions and memories to their initialized (factory-preset) status. Use this procedure if the buttons, keys, etc. malfunction, or when you wish to reset the memories ands functions.

<Procedure>
1. Turn off the **POWER** button.
2. While pressing the three leftmost buttons in the **RHYTHM SELECT** section (**METRONOME 1**, **METRONOME 2** and **1**) at the same time, turn the **POWER** button on again.

CONNECTION TERMINALS

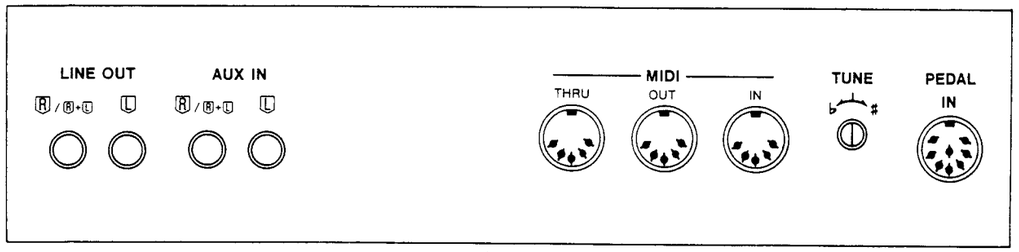

LINE OUT (output level 1.5 V, 600 Ω)
By plugging into an external high-power amplifier, the sound can be reproduced at a high volume. Or connect a tape recorder and use them as recording terminals. To output monaural sound, connect the external equipment to the **R/R+L** terminal. (Do not connect the **L** terminal.)

AUX IN (input level 500 mV, 33 kΩ)
Other instruments such as a rhythm machine or sound module can be connected to the piano so that the sound is output from the piano. To receive monaural sound, connect the other instrument to the **R/R+L** terminal. (Do not connect the **L** terminal.)

MIDI (Musical Instrument Digital Interface)
MIDI is the standard specification that enables connection to equipment such as synthesizers and personal computers. Data transmission and reception are possible between the Technics Digital Ensemble and instruments provided with MIDI terminals.

IN: The terminal that receives data from external equipment.
OUT: The terminal that transmits data from the piano to external equipment.
THRU: The terminal that transfers data from the IN terminal directly to other equipment.

- Use a 5-pin DIN cord (less than 15m long) for these connections.

TUNE
During an ensemble performance with other instruments, fine adjustments of pitch can be made using this knob. The center position is standard pitch (A=440 Hz). The pitch is adjustable in a range of ±50 cents.

PEDAL IN
Connect the cord from the included stand to this terminal.

PHONES (∩) × 2
For silent practice, headphones may be used. When plugged in, the speaker system is automatically switched off, and sound is heard only through the headphones.

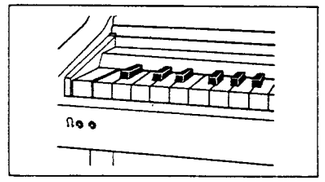

MIC (input level 7.5 mV, 10 kΩ)
The piano will accept a microphone of the unidirectional type. This type of microphone reduces feedback to a minimum. **VOLUME** balances instrumental or vocal sounds fed into the microphone with the loudness of the piano.

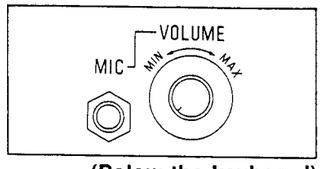

(Below the keyboard)

KEYBOARD RANGES

- This keyboard features Touch Response, by which you control the volume by playing the keys harder or softer.

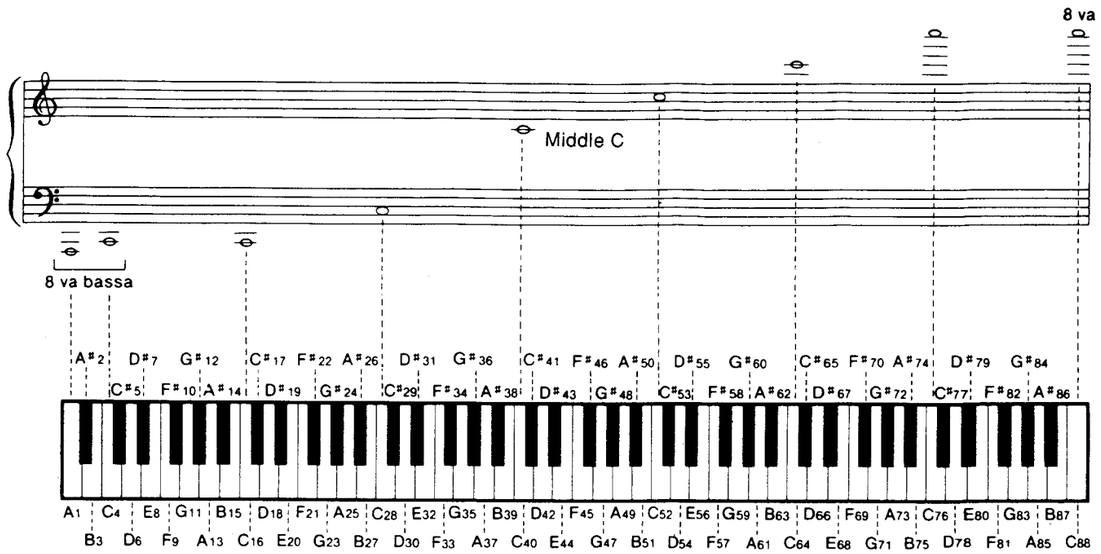

OPTIONS

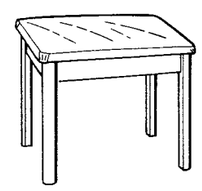

SZ-CP3
Bench

SZ-CP4M
Bench

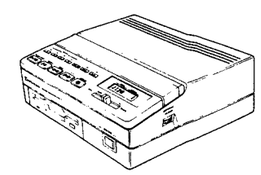

SY-MQ8
MIDI Sequencer

HOW TO ASSEMBLE THE PIANO

1 Assemble the side planks and the speaker box using the 4 brown bolts.

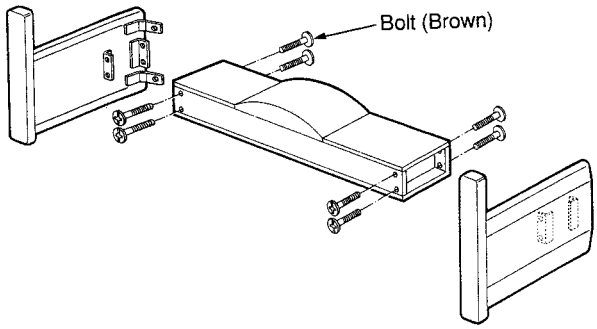

[Fig. 3]

2 Assemble the pedal box and the back plank using the 1 black bolt and 2 black screws.

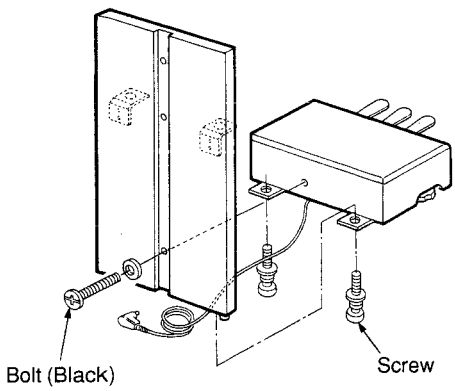

[Fig. 4]

3 Place the stand upright and attach the pedal unit to speaker box with 2 brown screws and 2 black bolts, and then set the pedal cord cover in the groove.

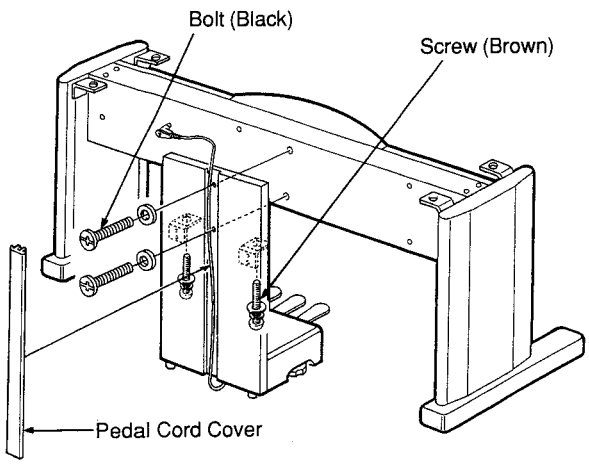

[Fig. 5]

4 Place the piano unit on the stand and secure it to the stand with 4 brown bolts.

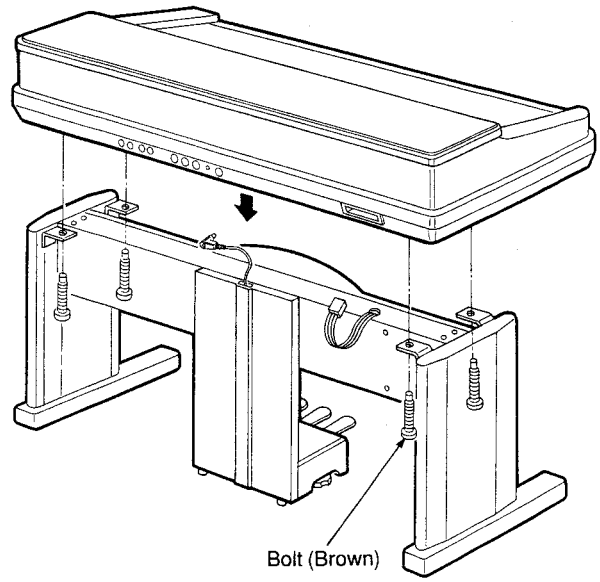

[Fig. 6]

5 Use the adjuster to make the pedal unit secure. Connect the pedal box cord and speaker box cord to their respective sockets located on the rear of the piano unit as shown below.

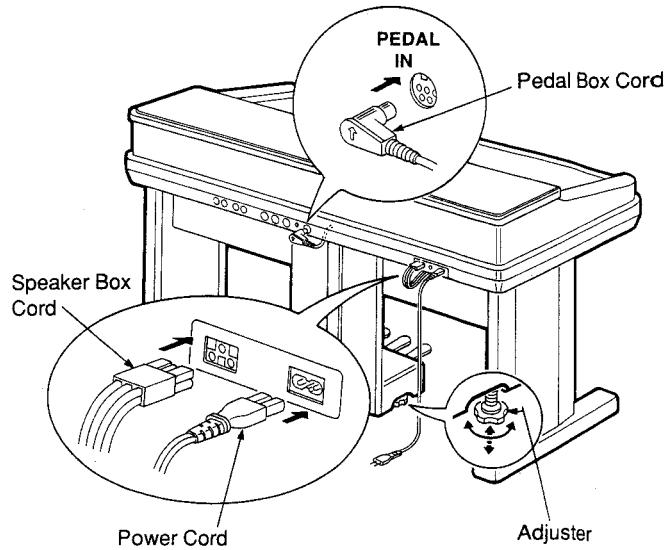

[Fig. 7]

DISASSEMBLY INSTRUCTIONS

1 Removing the top cover

1. Remove the top cover affixing screws (Ⓐ 4 pcs.).
2. Slide the top cover forward and lift up (as shown by the arrows).

2 Removing the keyboard cover

1. Remove the top cover. (See Step 1.)
2. Close the keyboard cover completely and lift up (as shown by the arrow).

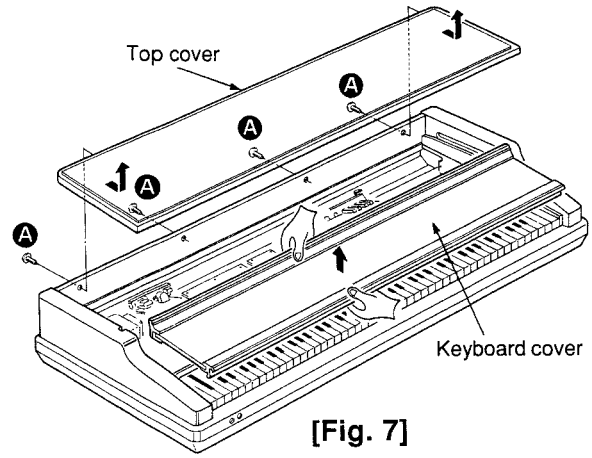

[Fig. 7]

3 Removing the control panel

1. Remove the top cover. (See Step 1.)
2. Remove the control panel affixing screws (Ⓑ 2 pcs. and Ⓒ 2 pcs.).
3. Remove the control panel as shown in Figure 8.

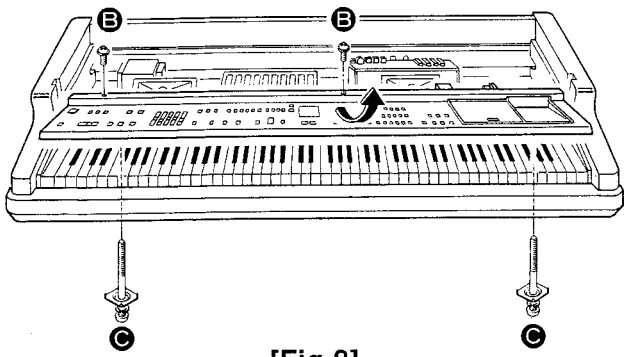

[Fig.8]

5 Removing the pedal assembly

1. Remove the pedal cord cover.
2. Remove the pedal assembly affixing screws (Ⓖ 2 pcs. and Ⓕ 2 pcs.).

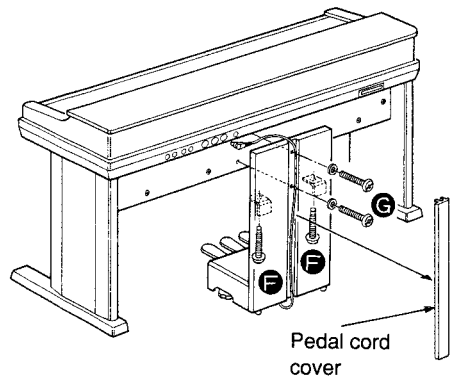

[Fig. 10]

4 Removing the keyboard assembly

1. Remove the top cover. (See Step 1.)
2. Remove the metal fittings affixing screws (Ⓓ 6 pcs.).
3. Remove the keyboard assembly affixing screws located on the bottom of the cabinet (Ⓔ 5 pcs.).

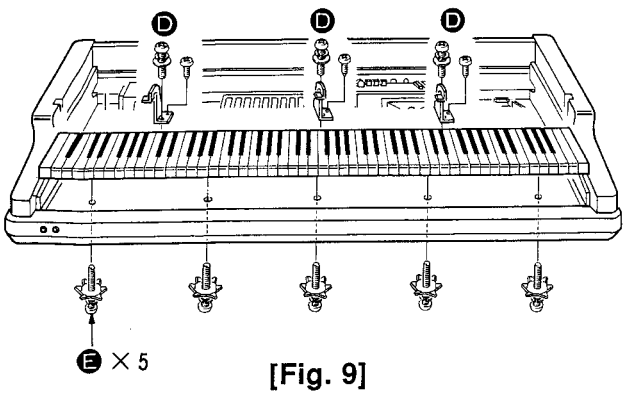

[Fig. 9]

6 Removing the speakers

1. Remove the pedal assembly. (See Step 5.)
2. Remove the mounting screws for the rear board of the speaker box (Ⓗ 10 pcs. and Ⓘ 4 pcs.).
3. Remove the mounting nuts for the 16 cm speakers (Ⓙ 4 pcs. each).
4. Remove the mounting screws for the 6.5 cm speakers (Ⓚ 4 pcs. each).

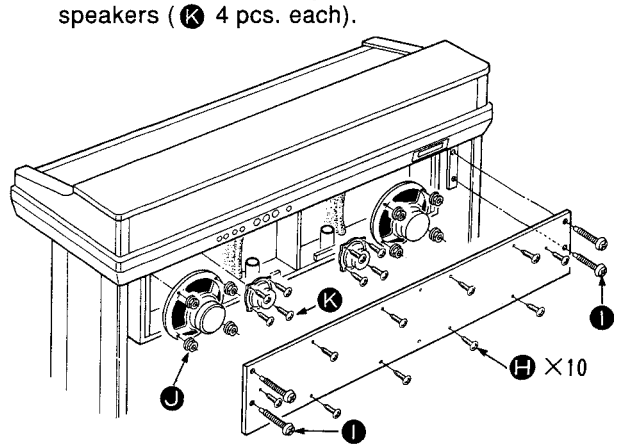

[Fig. 11]

7 Key(s)

Disassembly (Fig. 12)

1. Remove the keyboard assembly. (See Step 4.)
2. To release the key claw.
   ⓐ Press the front of the key downward slightly.
   ⓑ Press the rear of the key forward gently.
3. To remove the key, lift as shown in Figure 12.

NOTE:

- The key claw is easily broken. Do not apply undue force. Should a key claw break, it can still be used; however, a replacement is recommended.
- If a black key is to be replaced it is necessary to remove both adjacent white keys.

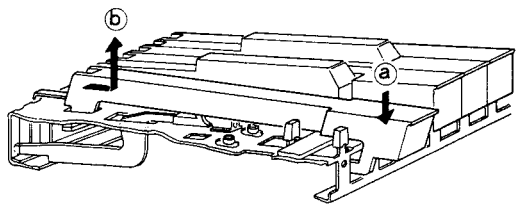

[Fig. 12]

Assembly (Fig. 13)

1. Insert the front part of the key into the chassis.
2. Insert the plate spring into the hammer notch as shown in Figure 13.
3. While slowly lowering the key into the chassis, insert the plate spring into the notch at the rear of the key.
4. Carefully insert the key into the opening in the chassis and slide the key towards the rear to lock it in place.

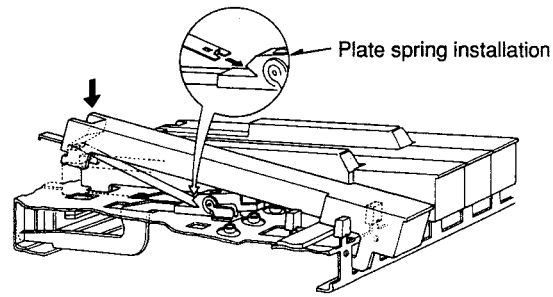

[Fig. 13]

8 Removing the printed circuit boards

MAIN P.C.B.

1. Remove the top cover. (See Step 1.)
2. Remove the MAIN P.C.B. mounting screws on the rear panel (Ⓛ 3 pcs.).
3. Release the 2 claws of the P.C.B. holder to remove the MAIN P.C.B.

ACP P.C.B.

1. Remove the top cover. (See Step 1.)
2. Remove the ACP P.C.B. mounting screws on the rear panel (Ⓜ 2 pcs.).
3. Remove the ACP P.C.B. mounting screws (Ⓝ 2 pcs.).

HP P.C.B.

1. Remove the keyboard assembly. (See Step 4.)
2. Remove the HP P.C.B. mounting screws (Ⓞ 2 pcs.).

MIC P.C.B.

1. Remove the keyboard assembly. (See Step 4.)
2. Remove the MIC P.C.B. cover mounting screws (Ⓟ 2 pcs.).
3. Remove the MIC volume knob and then remove the MIC P.C.B. mounting nuts (Ⓠ 2 pcs.).

Others P.C.B.

- If removing a P.C.B. other than those mentioned above, release the claws of the P.C.B. holder and remove the screws on each P.C.B.

CPL CPR CPSQ P.C.B.

1. Remove the control panel. (See Step 3.)
2. Remove the control panel P.C.B. mounting screws and spacers.

NOTE:

- When installing the CPL and CPR P.C.B.'s, be sure to affix the spacers, as shown in Figure 14.

9 Removing the digital disk recorder (DDR)

1. Remove the control panel. (See Step 3.)
2. Remove the chassis on which DDR is attached and then remove (Ⓡ 4 pcs. and Ⓢ 1 pcs.)

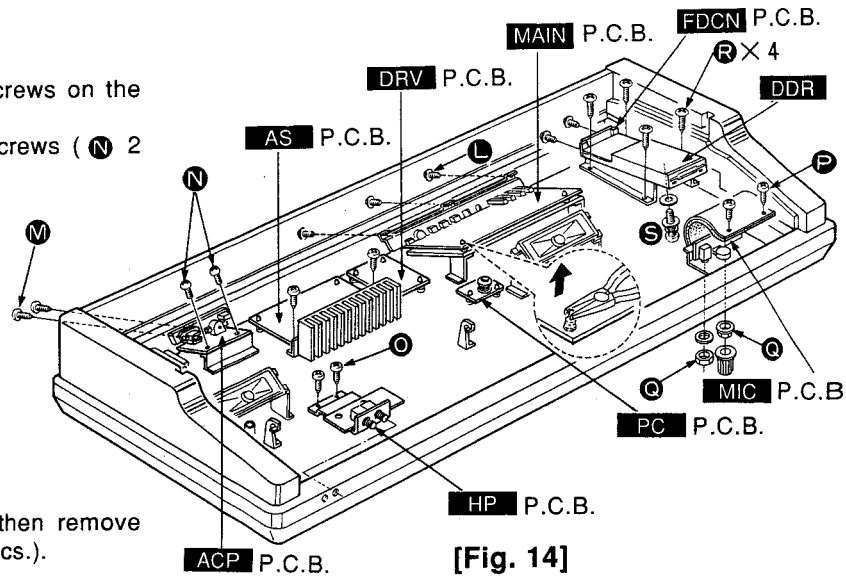

[Fig. 14]

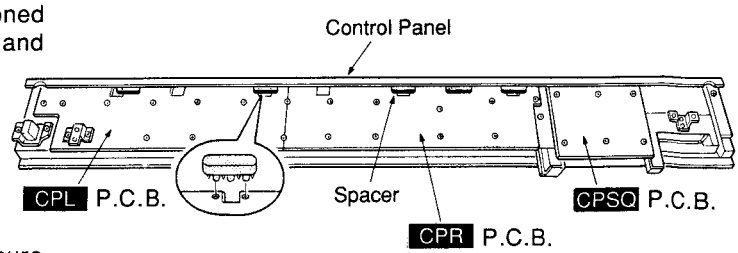

[Fig. 15]

PARTS LOCATION

Digital Reverb P.C.B. DRV
Amp & Power Supply P.C.B. AS
Control Panel Left P.C.B. CPL
AC Power Supply P.C.B. ACP
Power Switch S1
Power Transformer T1
Headphones P.C.B. HP
13cm×6cm, 8Ω Speaker SP1
CPR Control Panel Right P.C.B.
MAIN Main P.C.B.
CPSQ Sequencer Control P.C.B.
FDCN FD Connector P.C.B.
DDR Digital Disk Recorder
SP2 Speaker 13cm×6cm, 8Ω
D1 Power Indicator
MIC Microphone P.C.B.
D1 Peak Canceller P.C.B.
Soft Pedal
Sustain Pedal
Sostenuto Pedal

[Photo-1]

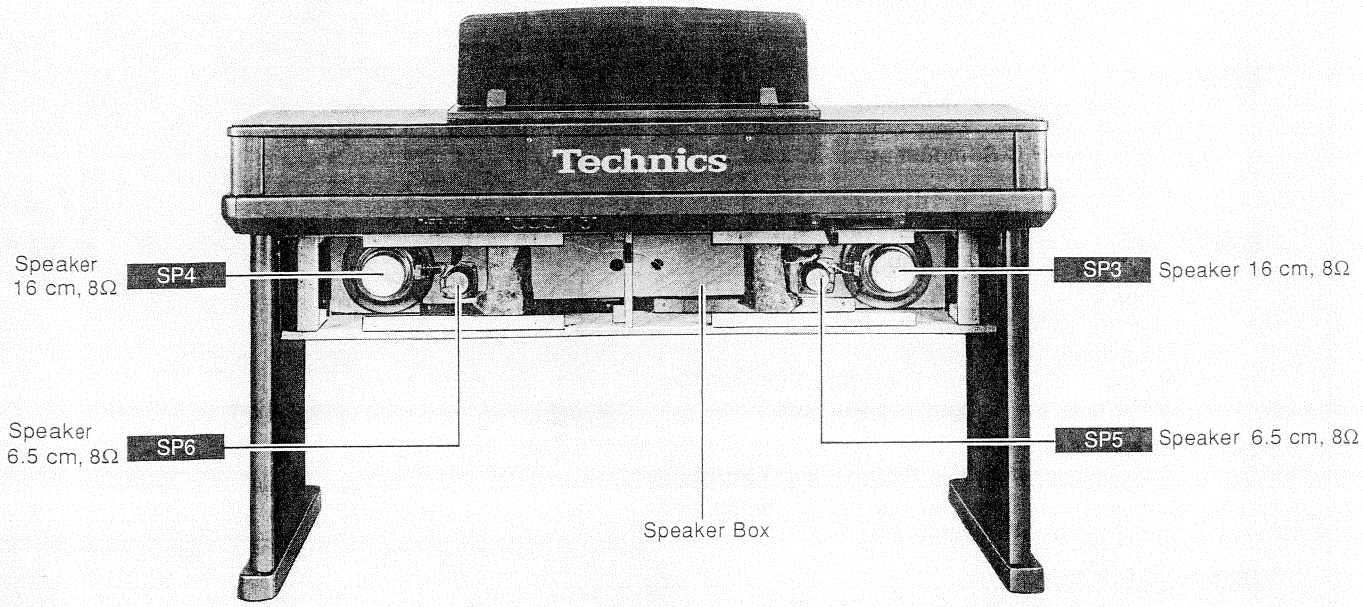

[Photo-2]

MEASUREMENTS AND ADJUSTMENTS

■ Measuring Equipment

• Oscilloscope 20 MHz, 10:1 probe/1:1 probe

ADJUSTMENT	MEASURING CONDITIONS	EQUIPMENT	ADJUSTMENT P.C.B.	ADJ. POINT	CONNECT POINT(S)	READING
DRV bias	any position	Oscilloscope	DRV P.C.B.	VR1	Checkpoint ⓬ ⓭	Photo-A Fig. A

1. Connect the oscilloscope channel 1 to DRV P.C.B. checkpoint ⓬ and connect the oscilloscope external trigger to DRV P.C.B. checkpoint ⓭. (Set the oscilloscope CH1 triggering with EXT in.)
2. Turn VR1 on the DRV P.C.B. fully clockwise and set the data starting point to the oscilloscope division scale to facilitate adjustment in next procedure. (See photo A-❶.)
3. Confirm that the first 4 bits (or 5 bits) are low when VR1 is turned fully counter-clockwise. (See photo A-❷, Fig. A-❷.)
4. Gradually turn VR1 clockwise and make the first 7 bits (2.8μs) turn to low. (See photo A-❸, Fig. A-❸.)

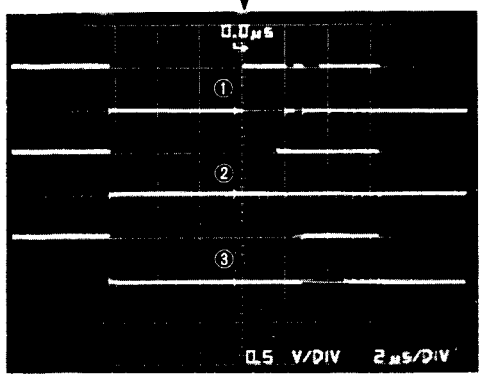

[Photo-A]

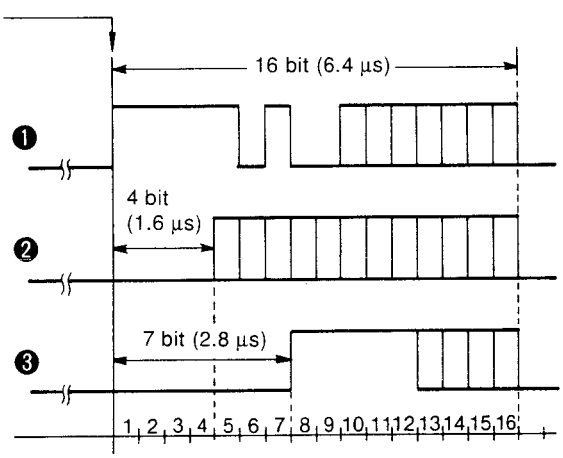

[Fig. A]

D/A Converter offset	any position	Oscilloscope	MAIN P.C.B.	VR2	IC21-① pin	0V ±5 mV

1. Set the oscilloscope voltage division to 5 mV/cm (Use the 1:1 oscilloscope probe) and connect the oscilloscope probe to MAIN P.C.B. IC21 Pin ①.
2. Turn VR2 to adjust the voltage to zero.

MEMO

SYMPTOMS WHICH APPEAR TO BE SIGNS OF TROUBLE

The following changes in performance may occur in the Digital Ensemble but do not indicate trouble.

	Phenomenon	Remedy
Sounds and effects	The buttons, keys, etc. malfunction.	• Turn off the **POWER** button once, then turn it on again. If this procedure is not successful, turn off the **POWER** button once. Then, while pressing the three leftmost buttons in the **RHYTHM SELECT** section (**METRONOME 1**, **METRONOME 2** and **1**) at the same time, turn the **POWER** button on again. (Note that, in this case, all programmable settings, functions and memories return to their factory-preset status.)
	No sound is produced when the keys are pressed.	• The **MAIN VOLUME** is at the minimum setting. Adjust the volume with the **MAIN VOLUME** control. • The **DEMO** ♪ button is on, and " _ _ _ " is shown on the display. Press the **DEMO** ♪ button to turn it off. The display returns to the tempo display. • The **BALANCE** volumes are set to **OFF**. Use the sliding **BALANCE** controls to set the volumes of the relevant parts to appropriate levels. • The local control for a part performed on the keyboard is set to off. Set the local control to on.
	The octave is higher or lower for some **SOUND SELECT** sounds.	• An octave change is programmed for some instrument sounds in order to make them easy to play. This is not a malfunction.
	Only percussive instrument sounds are produced when the keyboard is played.	• The **KEYBOARD PERCUSSION** button is on. Turn it off to return the keyboard to the normal sound.
	The sustain does not work even when the sustain pedal is depressed.	• When the **SUSTAIN PEDAL** button is off, the sustain does not work even when the pedal is depressed. Turn on the **SUSTAIN PEDAL** button.
	The sostenuto pedal and soft pedal do not operate properly. For example, when the soft pedal is depressed, the rhythm starts or a fill-in is played.	• Different functions can be programmed in these pedals. You can return the pedals to their original functions by turning off the instrument once, or by using the **PEDAL SETTING** mode.
Rhythm	The rhythm does not start.	• The **DRUMS** volume in the **BALANCE** section is set to **OFF**. Use the sliding **BALANCE** control to set the **DRUMS** volume to an appropriate level. • In the **RHYTHM SELECT** section, a **COMPOSER** number button with no stored performance was selected. Change the rhythm or store a new rhythm pattern in the **COMPOSER**. • When a **SEQUENCER** part button (in the **PROGRAM SECTION**) is on, the rhythm will not start unless the rhythm has been stored. Turn off the **SEQUENCER** part buttons. • The MIDI clock is set to the external clock. Set the MIDI clock to the internal clock.
	The only rhythm produced is a hi-hat and bass drum sound.	• This is the rhythm sound produced when the **KEYBOARD PERCUSSION** button is on. When the **KEYBOARD PERCUSSION** button is turned off, the rhythm returns to normal.
AUTO PLAY CHORD	No sound is produced for the automatic accompaniment, or only the sounds of some parts are produced.	• The **BALANCE** volumes are set to **OFF**. Use the sliding **BALANCE** controls to set the volumes of the relevant parts to appropriate levels. • An **ACCOMP** part does not sound if its corresponding **ACCOMP PART 1**, **2** or **3** button is off. Press the desired **ACCOMP PART 1**, **2** and **3** buttons to turn them on. • An **ACCOMP** part does not sound if its volume is set to 0. The volume of each **ACCOMP** part can be adjusted independently.

	Phenomenon	Remedy
SEQUENCER	Storage is not possible.	• The remaining storage capacity of the **SEQUENCER** memory is 0. Use the **TRACK CLEAR** or **SONG CLEAR** function to erase the memory. • The MIDI **EXT SEQ MODE** is set to on. Set it to off.
	Multi-track storage is not possible.	• The playback track has been selected, but the **START/STOP** button has not been pressed. A flashing track indicator shows the track which is ready for recording, and a lit track indicator shows a track which is ready for playback. To record one track while listening to another (playback) track, press the **START/STOP** button to begin playback.
	A previously stored song is played back.	• The tracks of a song which was previously stored have not been cleared. Use the **TRACK CLEAR** or **SONG CLEAR** function to erase the memory before recording a new song.
COMPOSER	Storage is not possible.	• The remaining storage capacity of the **COMPOSER** memory is 0. Erase a **COMPOSER** number button in the **RHYTHM SELECT** section in which a pattern is stored.
	The playback timing of the rhythm pattern is different from the timing with which it was stored.	• The **QUANTIZE** function was on when the pattern was recorded. (The default setting is " 1 6 ".) Set the **QUANTIZE** function to " O F F ".
	Setting the time signature is not possible.	• The time signature cannot be changed for a pattern which is currently stored in the **COMPOSER**. When storing in the **COMPOSER** and " A L L " appears on the display, press the **COMPOSER CLEAR** button to erase the previously stored rhythm pattern.
	When editing a preset rhythm, the drums sound is not erased even when the **PERC ERASE** button is pressed.	• Some of the drums sounds of preset rhythm patterns cannot be erased. Follow the **COMPOSER CLEAR** procedure.
Digital Disk Recorder	The Digital Disk Recorder produces a noise during recording or playback.	• This occurs when the Digital Disk Recorder is reading a disk. It does not indicate a problem.
	When the operation to load from a memory disk is performed, the contents of the **SEQUENCER** are erased.	• When performing the load operation from a memory disk, the **SEQUENCER** memory changes to that of the data loaded from the memory disk. If you wish to preserve a song which is stored in the **SEQUENCER** memory, save it in a memory disk before performing the load procedure.

ERROR DISPLAY

When using the Digital Disk Recorder any of the following error messages may appear on the display.
If an error message appears, follow the appropriate steps to remedy the problem.

Display	Remedy
Er-0	The memory disk has not been formatted by the Digital Disk Recorder. • Insert a correctly formatted disk.
Er-1	Loading failure. • Perform the loading procedure again.
Er-2	No memory disk in the Digital Disk Recorder. • Insert a memory disk.
Er-3	You have attempted to load a song number which has not been saved. • Load a song number which has been saved.
Er-4	No Digital Disk Recorder. • Install the Digital Disk Recorder
Er-5	Saving failure. • Perform the saving procedure again.
Er-6	The memory disk is write-protected. • Close the write-protect window of the disk.
Er-7	No remaining memory storage capacity. • Insert a new disk, perform the saving procedure after formatting it.
Er-8	Formatting failure. • Perform the formatting procedure again.
Er-9	You have attempted to save a song which is copy-protected. • A copy-protected song cannot be saved.
E 13	The **SEQUENCER** does not function because the **EXT SEQ MODE** is on. • Set the **EXT SEQ MODE** to off.

Warning:

- Some pre-recorded disks (for example, those recorded by the manufacturer) are copy-protected. Data from these disks cannot be copied.
- When the power is turned off after a copy-protected song has been loaded, the **SEQUENCER** contents will be erased.
- If a copy-protected song has been loaded and you want to then record a new song in the **SEQUENCER** and save it on a disk, be sure to first turn the power off once or perform the initialization procedure.

MIDI IMPLEMENTATION CHART

Digital Ensemble
[SX-PR50V/SX-PR150/SX-PR250/SX-PR350] **(Transmitted)**

Function		RIGHT	LEFT	ACCOMP 1	ACCOMP 2	ACCOMP 3	BASS	DRUMS	CONTROL	Remarks
Basic Channel	Default	1~16	1~16	1~16	1~16	1~16	1~16	1~16	1~16	memorized
	Changed	1~16	1~16	1~16	1~16	1~16	1~16	1~16	1~16	
Mode	Default	3	3	3	3	3	3	3	3	OMNI OFF POLY MODE
	Messages	×	×	×	×	×	×	×	×	
	Altered	—	—	—	—	—	—	—	—	
Note Number		31~102	31~102	31~102	31~102	31~102	31~102	36~69**	—	Changes depending on the position of the transpose control.
	True voice	—	—	—	—	—	—	—	—	
Velocity	Note ON	○	○	○	○	○	○	○	—	
	Note OFF	× (9nH:v=0)	× (9nH:v=0)	× (9nH:v=0)	× (9nH:v=0)	× (9nH:v=0)	× (9nH:v=0)	× (9nH:v=0)	—	
After Touch	Key's	×	×	×	×	×	×	×	×	
	Ch's	×	×	×	×	×	×	×	×	
Pitch Bender		×	×	×	×	×	×	×	×	
Control Change	7	○	○	○	○	○	○	○	○	volume (MAIN VOLUME)
	64	○	○	○	○	○	○	×	×	sustain
	66	○	○	×	×	×	×	×	×	sostenuto pedal
	67	○	○	○	○	○	○	×	×	soft pedal
	80	×	○	×	×	×	×	×	×	auto play chord
	82	×	×	×	×	×	×	○	×	intro & ending, fill in
	83	○	○	×	×	×	×	×	×	octave shift
	93	○	×	×	×	×	×	×	×	chorus (DIGITAL CELESTE 1)
	94	○	×	×	×	×	×	×	×	celeste (DIGITAL CELESTE 2)
Prog Change		○	○	○	○	○	○	○	×	
	True #	—	—	—	—	—	—	—	—	
System exclusive		×								
System common	Song Pos	×								
	Song Sel	*○× (0~19)								
	Tune	×								
System Real Time	Clock	○								
	Commands	* ○ ×								start/stop, continue
Aux Messages	Local ON/OFF	×	×	×	×	×	×	×	—	
	All notes OFF	○	○	○	○	○	○	○	—	
	Active Sense	○								
	Reset	×								
Notes		* ○ × .....Whether or not the data for each of these items is transmitted can be set. **When the program change mode is set to **TEC** (on), note numbers for **DRUMS** differ.								

Mode 1: OMNI ON, POLY **Mode 2:** OMNI ON, MONO ○: Yes
Mode 3: OMNI OFF, POLY **Mode 4:** OMNI OFF, MONO ×: No

Digital Ensemble
[SX-PR50V/SX-PR150/SX-PR250/SX-PR350] (Recognized)

Function		RIGHT	LEFT	ACCOMP 1	ACCOMP 2	ACCOMP 3	BASS	DRUMS	CONTROL	Remarks
Basic Channel	Default	1~16	1~16	1~16	1~16	1~16	1~16	1~16	1~16	memorized
	Changed	1~16	1~16	1~16	1~16	1~16	1~16	1~16	1~16	
Mode	Default	3	3	3	3	3	3	3	3	OMNI OFF POLY MODE
	Messages	×	×	×	×	×	×	×	×	
	Altered	—	—	—	—	—	—	—	—	
Note Number		0~127	0~127	0~127	0~127	0~127	0~127	36~69**	—	Changes depending on the sound.
	True voice	36~119	36~119	36~119	36~119	36~119	24~107	36~69	—	
Velocity	Note ON	○	○	○	○	○	○	○	—	
	Note OFF	×	×	×	×	×	×	×	—	
After Touch	Key's	×	×	×	×	×	×	×	×	
	Ch's	×	×	×	×	×	×	×	×	
Pitch Bender		○	○	○	○	○	○	×	×	
Control Change	7	○	○	○	○	○	○	○	○	volume (MAIN VOLUME)
	64	○	○	○	○	○	○	×	×	sustain
	66	○	○	×	×	×	×	×	×	sostenuto pedal
	67	○	○	○	○	○	○	×	×	soft pedal
	80	×	○	×	×	×	×	×	×	auto play chord
	82	×	×	×	×	×	×	○	×	intro & ending, fill in
	83	○	×	×	×	×	×	×	×	octave shift
	93	○	×	×	×	×	×	×	×	chorus (DIGITAL CELESTE 1)
	94	○	×	×	×	×	×	×	×	celeste (DIGITAL CELESTE 2)
Prog Change	True #	0~15 (PR50V/PR150) 0~21 (PR250/PR350)	0~15 (PR50V/PR150) 0~21 (PR250/PR350)	0~15 (PR50V/PR150) 0~21 (PR250/PR350)	0~15 (PR50V/PR150) 0~21 (PR250/PR350)	0~15 (PR50V/PR150) 0~21 (PR250/PR350)	0~15 (PR50V/PR150) 0~21 (PR250/PR350)	0~29		
System exclusive		×								
System common	Song Pos	×								
	Song Sel	*○× (0~19)								
	Tune	×								
System Real Time	Clock	○								
	Commands	* ○ ×								start/stop, continue
Aux Messages	Local ON/OFF	×	×	×	×	×	×	×	—	
	All notes OFF	○	○	○	○	○	○	○	—	
	Active Sense	○								
	Reset	×								
Notes		* ○ × .....Whether or not the data for each of these items is transmitted can be set. **When the program change mode is set to **TEC** (on), note numbers for **DRUMS** differ.								

Mode 1: OMNI ON, POLY **Mode 2:** OMNI ON, MONO ○: Yes
Mode 3: OMNI OFF, POLY **Mode 4:** OMNI OFF, MONO ×: No

PRECAUTIONS BEFORE SERVICING

■ Precautions for measuring of the output waveforms.

1. The waveform was measured by "National Digital Storage Oscilloscope VP-5730A". Therefore the waveforms of musical tone signals shown may differ somewhat due to variation of timing of triggering.
2. Since the 1/10 test probe is used, the indicated voltage value on the bottom part of each waveform photo is 1/10 of the actual value (e.g. 0.2V/cm should be 2.0V/cm).
3. This Digital Ensemble has a touch sensitivity type keyboard. Therefore the touch sensor level must be set to "0" level when checking waveform measurements after activating the initial setting.
   - Initial setting method
   (1) Turn off the **POWER** button.
   (2) While pressing the three leftmost buttons in the **RHYTHM SELECT** section (**METRONOME 1**, **METRONOME 2** and **1**) at the same time, turn the **POWER** button on again.
   - Touch sensitivity setting method
   (1) Select "TOUCH SENSITIVITY" in the **PROGRAM SECTION** with the **SOUND** button.
   (2) Adjust the touch sensitivity level to "0" with the **TRANSPOSE/PROGRAM** button.
   (3) Press the **SOUND** button again to set the level.

■ Important safety notice:

Components identified by a ⚠ mark have special characteristics important for safety.
When replacing any of these components, use only the manufacturer's specified parts.

■ Symbolic marks

The symbolic marks for resistors and capacitors used in these circuits are classified following TABLE-1 and TABLE-2.

1. RESISTORS
   - Resistors without a symbolic mark are FIXED CARBON FILM RESISTORS (ERD-type).
   - All resistors are 1/4 WATT, ±5% TOLERANCE unless otherwise designated in the schematic diagrams.

(TABLE-1)

SYMBOL	SPECIFICATION	SYMBOL	SPECIFICATION
Ⓕ	Fixed Carbon Film Resistors "FLAME-PROOF" (ERD__F__type)	Ⓕ	Fixed Metal Film Resistors "FLAME-PROOF" (ERX__type)
Ⓕ	Fixed Wire Wound Resistors "FLAME-PROOF" (ERF__type)	[F]	Fuse Type Fixed Metal Oxide Film Resistors "FLAME-PROOF" (ERQ__type)
Ⓕ	Fixed Metal Oxide Film Resistors "FLAME-PROOF" (ERG__type)	[F]	Fuse Type Fixed Carbon Film Resistors "FLAME-PROOF" (ERD2FC__type)
Ⓖ	Fixed Metal Film Resistors (Precision and High Stability) (ERO__type)		

2. CAPACITORS
   - Capacitors without a symbolic mark are POLYESTER CAPACITORS. (ECQM-type, ECQG-type, ±10% Tolerance)
   - Polarized capacitors without a symbolic mark are Aluminum Electrolytic Capacitors. (ECEA-type,±20% Tolerance)

(TABLE-2)

SYMBOL	SPECIFICATION	TYPE
Ⓝ	Non-Polarized Electrolytic Capacitors	ECEA__KN__type
Ⓨ	Non-Polarized Electrolytic (for Network System)	ECEA__Y__type
(MS)	Aluminum Electrolytic Capacitors (Low leakage current type)	ECEA__M__type
Ⓩ	Aluminum Electrolytic Capacitors (Low impedance type)	ECEA__Z__type
Ⓣ	Tantalum Solid Electrolytic Capacitors	ECS__type
(TF)	Metalized Plastic Film Capacitors (TF Series)	ECQV__type
	Polyester Film Capacitors	ECQB__type
○	Temperature Compensating Ceramic Capacitors	ECC__type
	High-Dielectric Constant Ceramic Capacitors	ECK__type ECR__type
	Ceramic Capacitors (Cylinder type)	ECBA__type
	Metalized Polyester Film Capacitors for Across the Line	ECQ__EW__type
	Aluminum Electrolytic Capacitors for Smoothing Circuit	ECES__type

MEMO

WIRING CONNECTION DIAGRAM

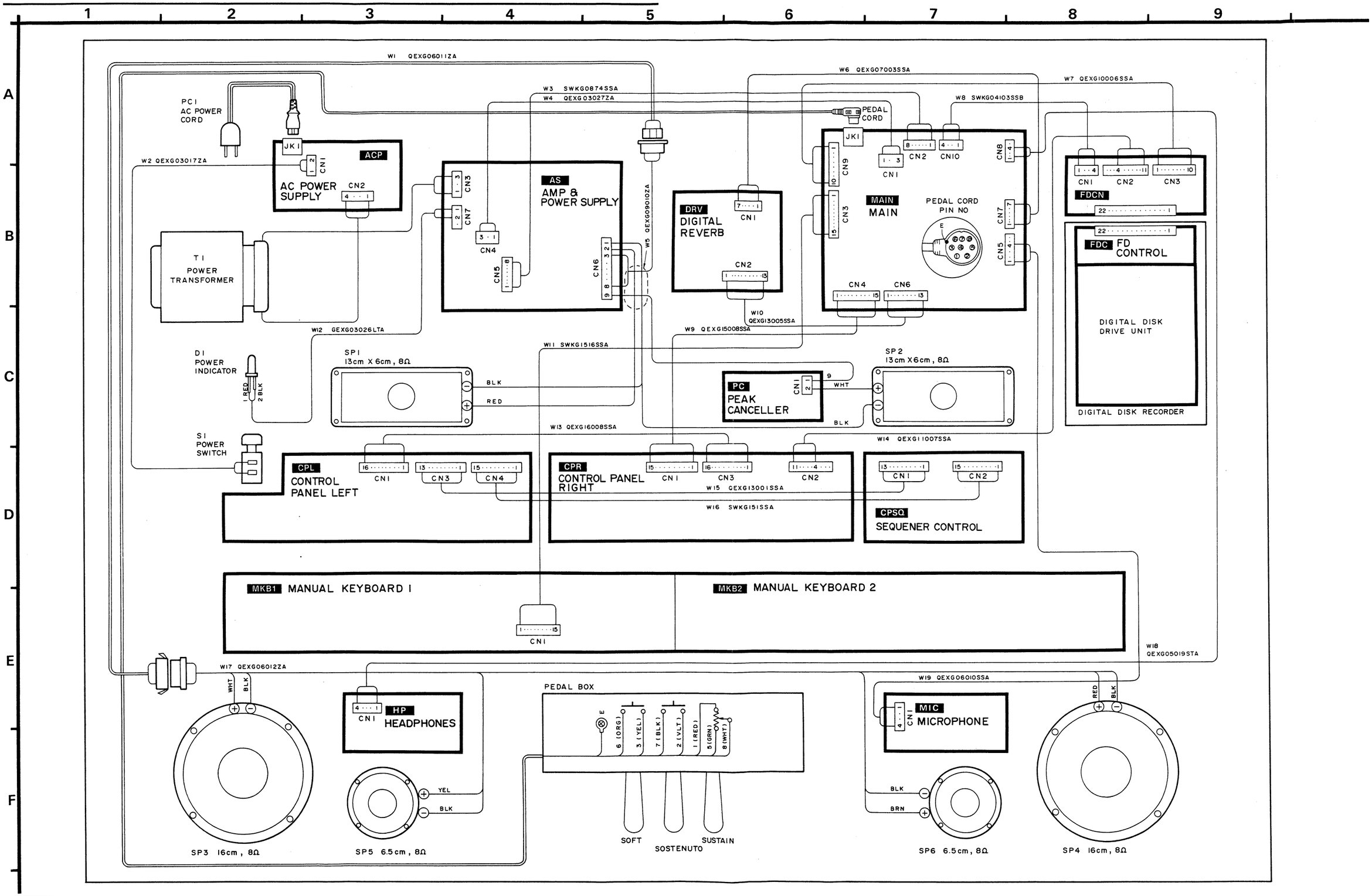

BLOCK DIAGRAM

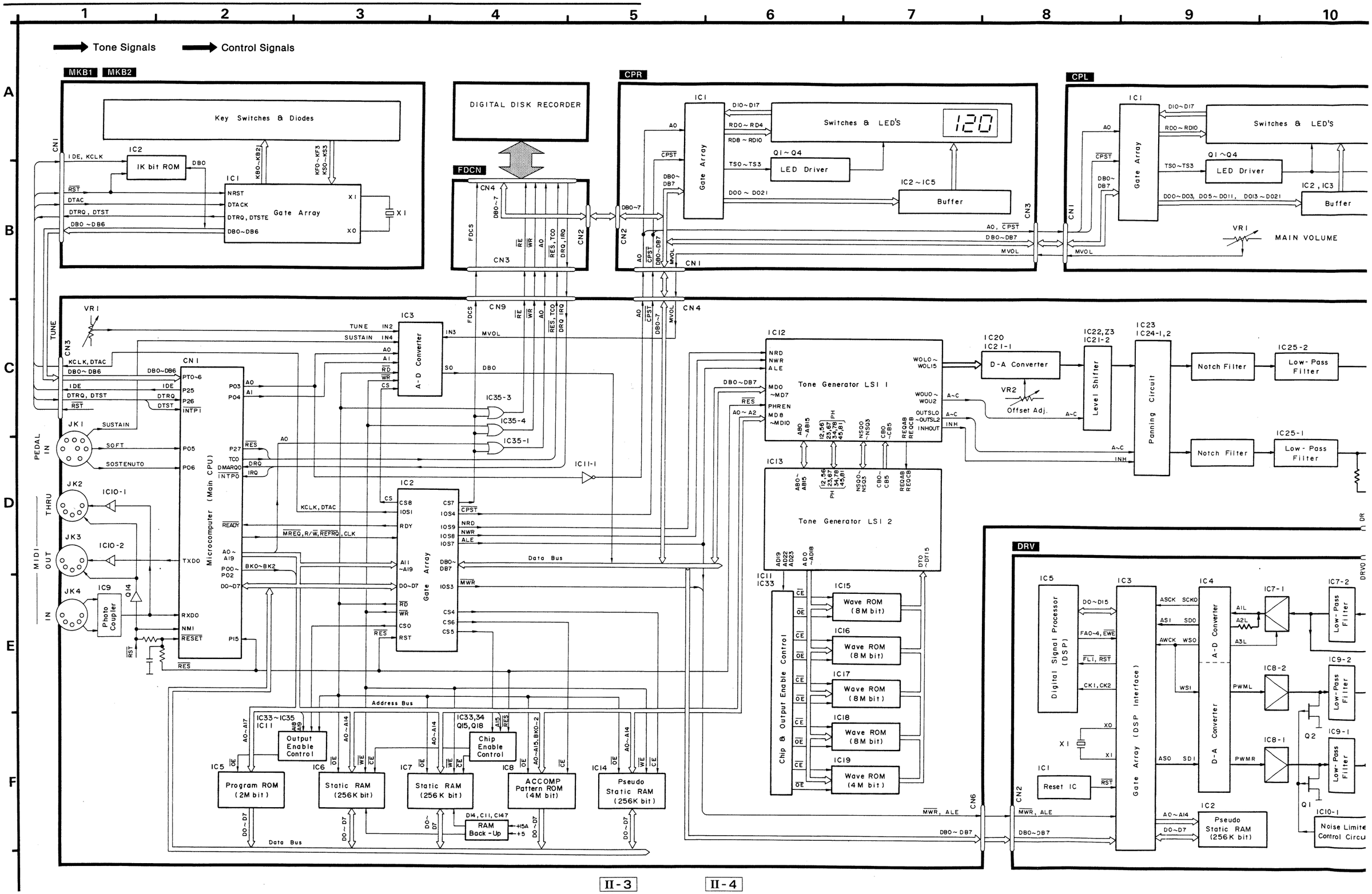

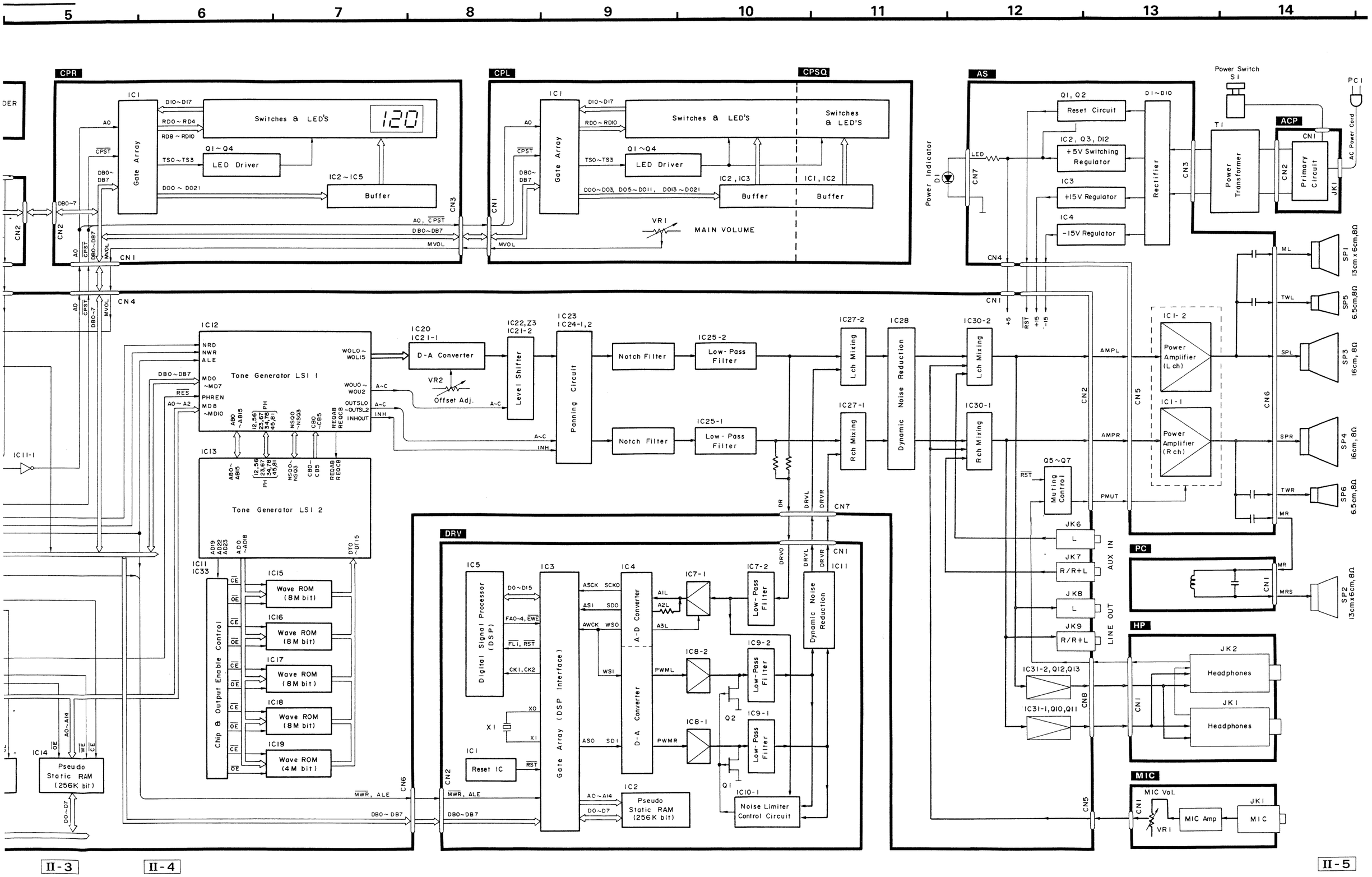
5
6
7
8
9
10
11
12
13
14
CPR
IC1
Gate Array
Switches & LED'S
120
LED Driver
Q1~Q4
IC2~IC5
Buffer
CPL
CPSQ
IC2, IC3
IC1, IC2
VR1
MAIN VOLUME
AS
Power Switch
S1
PC1
AC Power Cord
Reset Circuit
IC2, Q3, D12
+5V Switching Regulator
IC3
+15V Regulator
IC4
-15V Regulator
Rectifier
Power Transformer
Primary Circuit
ACP
Power Indicator
D1
CN1
CN2
CN3
CN4
CN5
CN6
CN7
CN8
IC12
Tone Generator LSI 1
IC13
Tone Generator LSI 2
IC11-1
IC11
IC33
Chip & Output Enable Control
IC15
Wave ROM (8M bit)
IC16
Wave ROM (8M bit)
IC17
Wave ROM (8M bit)
IC18
Wave ROM (8M bit)
IC19
Wave ROM (4M bit)
IC14
Pseudo Static RAM (256K bit)
IC20
IC21-1
D-A Converter
VR2
Offset Adj.
IC22, Z3
IC21-2
Level Shifter
IC23
IC24-1,2
Panning Circuit
Notch Filter
IC25-2
IC25-1
Low-Pass Filter
IC27-2
IC27-1
Lch Mixing
Rch Mixing
IC28
Dynamic Noise Reduction
IC30-2
IC30-1
Muting Control
Q5~Q7
IC1-2
IC1-1
Power Amplifier (Lch)
Power Amplifier (Rch)
SP1 13cm x 6cm, 8Ω
SP5 6.5cm, 8Ω
SP3 16cm, 8Ω
SP4 16cm, 8Ω
SP6 6.5cm, 8Ω
SP2 13cm x 6cm, 8Ω
JK6
JK7
JK8
JK9
AUX IN
LINE OUT
PC
HP
JK2
JK1
Headphones
IC31-2, Q12, Q13
IC31-1, Q10, Q11
MIC
MIC Vol.
MIC Amp
MIC
DRV
IC5
Digital Signal Processor (DSP)
IC3
Gate Array (DSP Interface)
IC4
A-D Converter
D-A Converter
IC7-1
IC7-2
IC8-2
IC8-1
IC9-2
IC9-1
Q1
Q2
IC10-1
Noise Limiter Control Circuit
IC2
Pseudo Static RAM (256K bit)
IC1
Reset IC
X1
II-3
II-4
II-5

MAIN HP MIC — MAIN, HEADPHONES AND MICROPHONE CIRCUIT BOARD

* Main P.C.B. comparison chart by area.

Area	P.C.B. No.	Q8, 9
[M] [XM]	SXPG204351	○
[EZ] [MC] [XL]	SXPG2043141	×
Other areas	SXPG204311	

MAIN MAIN CIRCUIT BOARD — Circuit view on top of P.C.B. • [M] [XM] areas **SXPG204351** • [EZ] [MC] [XL] areas **SXPG2043141** • Other areas **SXP**

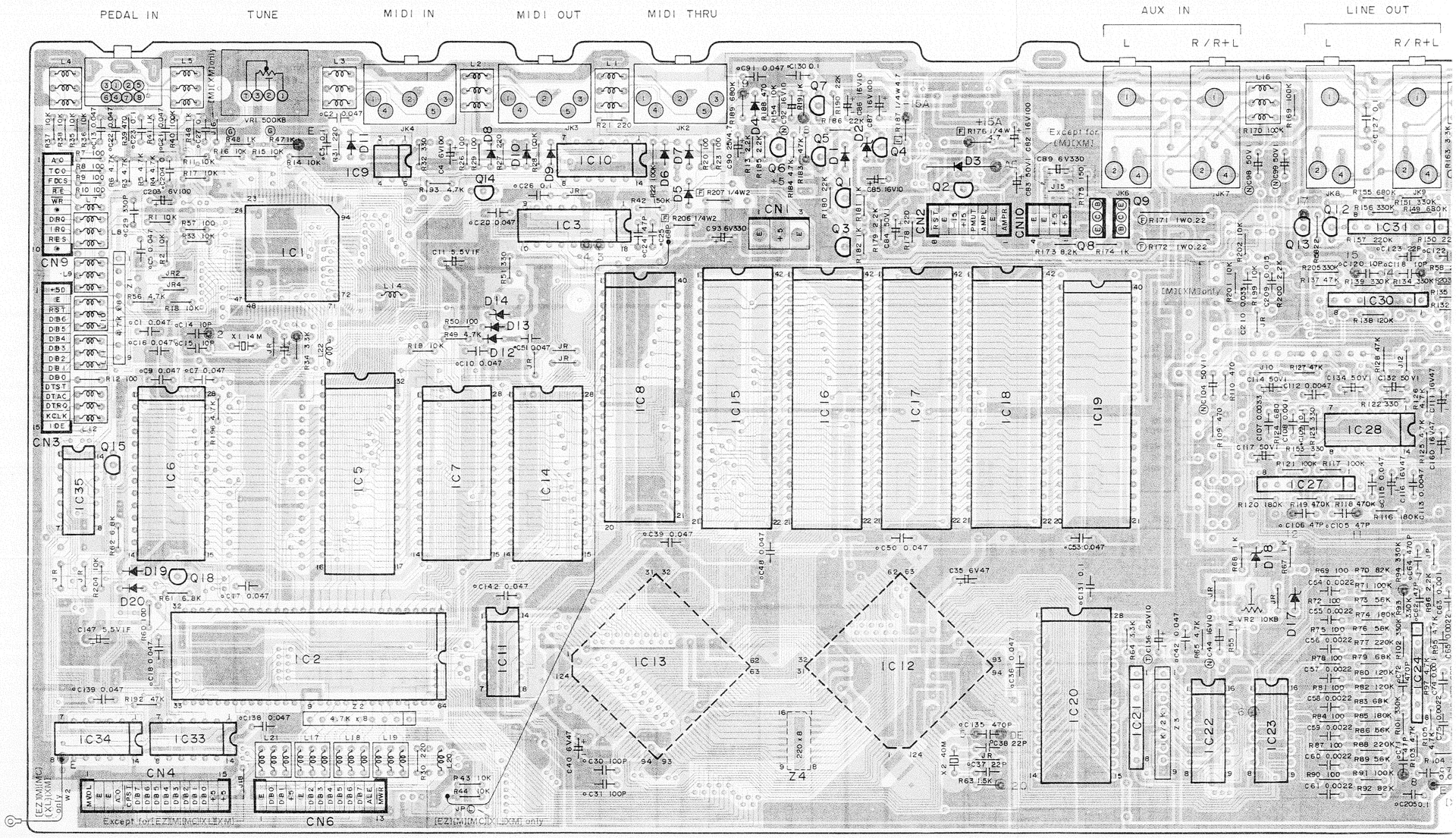

Waveform measurement

1. Activate the initial setting method. (Refer to page I -16)
2. Set the touch sensitivity level to the "0". (Refer to page I -16)
3. Set the D. Piano to required mode following each checkpoint(s).

❶

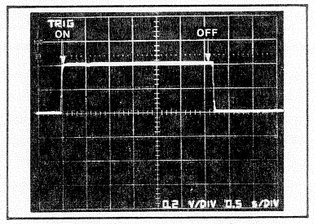

• POWER .....ON→OFF

❷ X1, 14MHz

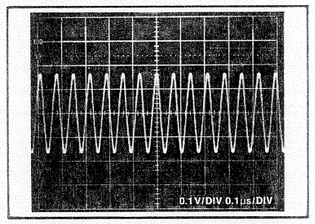

❸ $\overline{RD}$

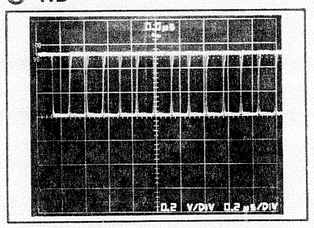

❹ $\overline{WR}$

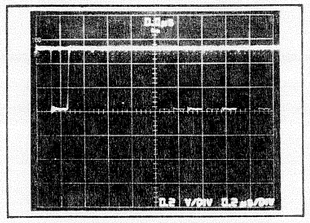

❺ $\overline{RES}$

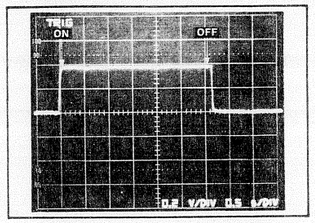

• POWER .....ON→OFF

❻

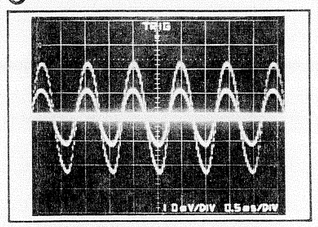

• SOUND SELECT .....FLUTE
• BALANCE (RIGHT) .....MAX
• MAIN VOLUME .....MAX
• Keyboard .....C_{52} Key

❼

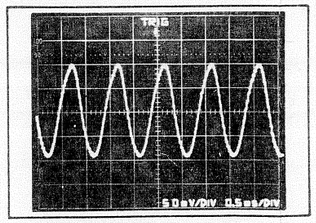

• SOUND SELECT .....FLUTE
• BALANCE (RIGHT) .....MAX
• MAIN VOLUME .....MAX
• Keyboard .....C_{52} Key

❽

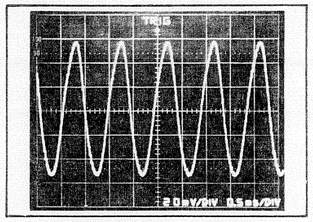

• SOUND SELECT .....FLUTE
• BALANCE (RIGHT) .....MAX
• MAIN VOLUME .....MAX
• Keyboard .....C_{52} Key

❾

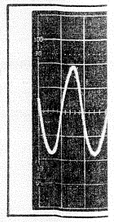

• SOUND S
• BALANCI
• MAIN VO
• Keyboard

D MICROPHONE CIRCUIT BOARD

* Main P.C.B. comparison chart by area.

Area	P.C.B. No.	Q8, 9	R171~R175	JP16	J15	JP Ⓛ	W1, 2	J18
[M] [XM]	SXPG204351	○	○	○	×	○	○	×
[EZ] [MC] [XL]	SXPG2043141	×	×	×	○	×	×	○
Other areas	SXPG204311							

5 6 7 8 9 10 11 12 13 14

Circuit view on top of P.C.B. • [M] [XM] areas **SXPG204351** • [EZ] [MC] [XL] areas **SXPG2043141** • Other areas **SXPG204311**

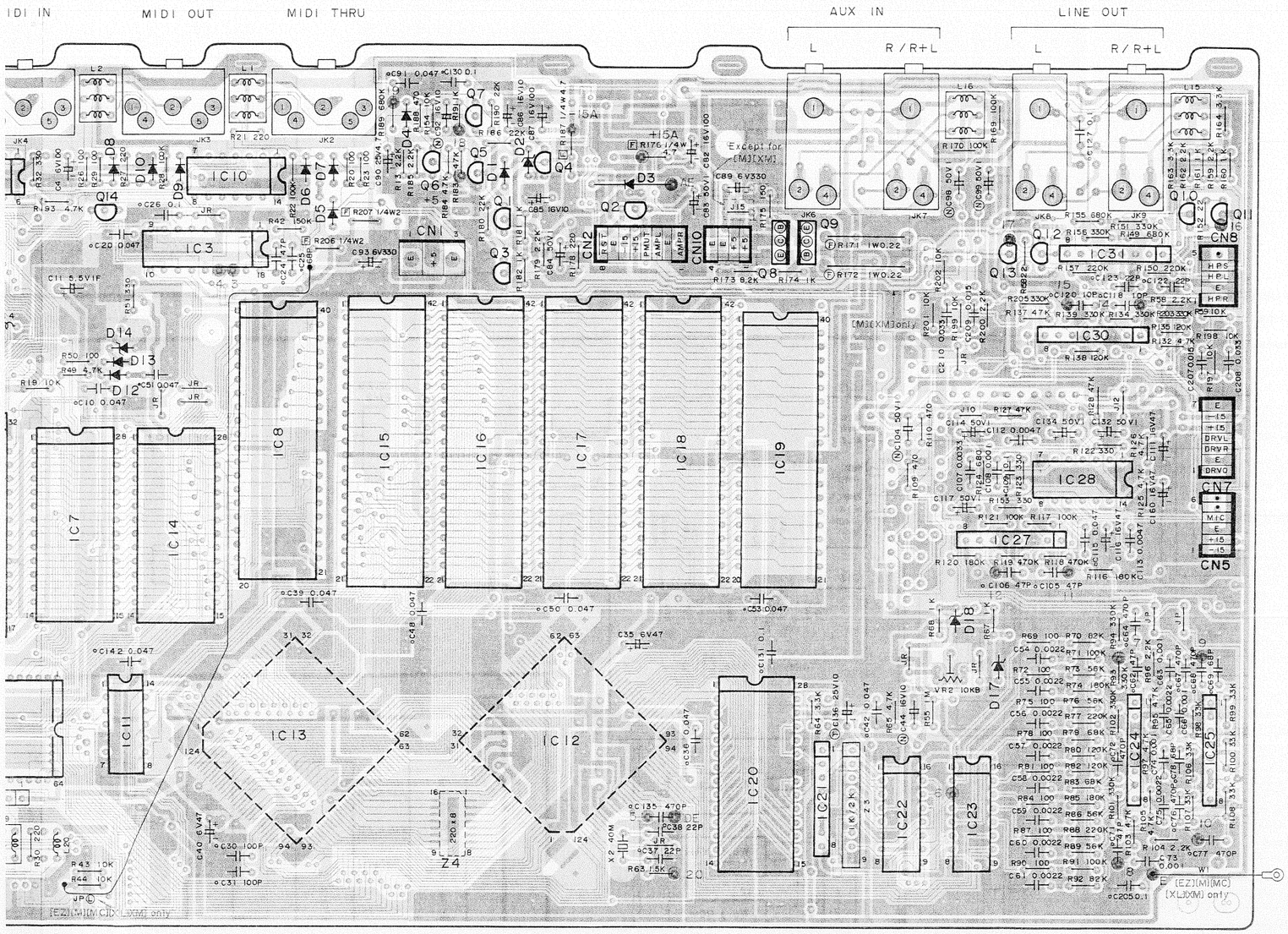

HP HEADPHONES CIRCUIT BOARD

• [EZ] [M] [MC] [XL] [XM] areas **SXPG203741B**

• other areas **SXPG203721B**

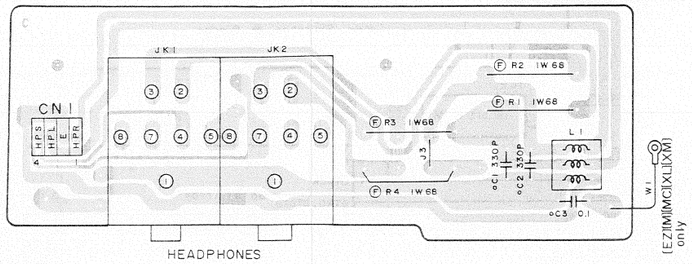

MIC MICROPHONE CIRCUIT BOARD **SXPG142221**

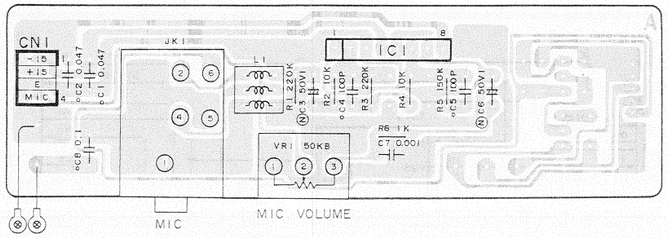

NOTES: MAIN

• IC'S

IC1:	SVIGD70320GJ
IC2:	SVIGMB621407
IC3:	SVIGMSM6253
IC5:	QSIGBR35AX0
IC6, 7:	SVIGM5256BLL
IC8:	QSIGH3C04C44
IC9:	SVIGTLP513
IC10:	SVIGM74LS07
IC11:	SVIGTC40H004
IC12:	MN73012PGC
IC13:	MN73013PGD
IC14:	SVIGHM65256
IC15:	QSIGH3C08C26
IC16:	QSIGH3C08C45
IC17:	QSIGH3C08C71
IC18:	QSIGU3C08026
IC19:	SVIGU3C04145
IC20:	SVIGPCM54
IC21:	SVIGM5238L
IC22, 23:	SVIGT74H4051
IC24, 25, 27, 30, 31:	SVIGM5218L
IC28:	SVIGLM1894N
IC33, 35:	SVITC40H032
IC34:	SVIGTC40H000

• TRANSISTORS

Q1, 2, 6:	2SC2320LFG
Q3~5, 7, 14:	2SA1015-GR
Q8, 9: M XM	2SA1643
Q10, 12:	2SC3940ARS
Q11, 13:	2SA1534ARS
Q15, 18:	2SC1047C

• DIODES

D1, 4~13, 19, 20:	MA165TA5
D2:	MA4062
D3:	EK04
D14:	MA4056
D17, 18:	MA4051MTA

NOTE: MIC

• IC

IC1:	SVIGM5218L

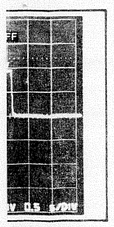

..ON→OFF

❻

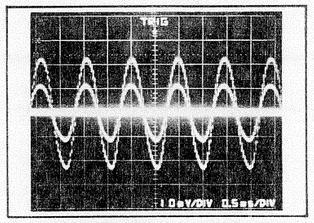

• SOUND SELECT .....FLUTE
• BALANCE (RIGHT) .....MAX
• MAIN VOLUME .....MAX
• Keyboard .....C_{52} Key

II-7

❼

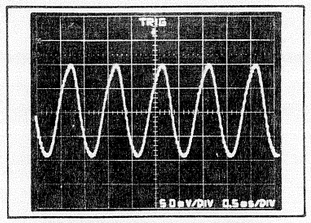

• SOUND SELECT .....FLUTE
• BALANCE (RIGHT) .....MAX
• MAIN VOLUME .....MAX
• Keyboard .....C_{52} Key

❽

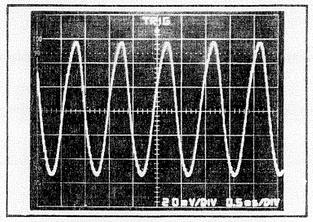

• SOUND SELECT .....FLUTE
• BALANCE (RIGHT) .....MAX
• MAIN VOLUME .....MAX
• Keyboard .....C_{52} Key

❾

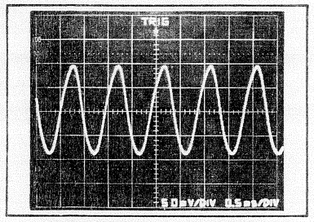

• SOUND SELECT .....FLUTE
• BALANCE (RIGHT) .....MAX
• MAIN VOLUME .....MAX
• Keyboard .....C_{52} Key

II-8

❿

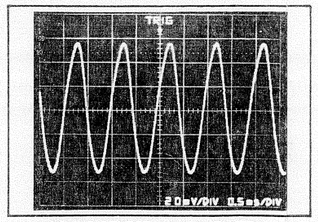

• SOUND SELECT .....FLUTE
• BALANCE (RIGHT) .....MAX
• MAIN VOLUME .....MAX
• Keyboard .....C_{52} Key

⓫

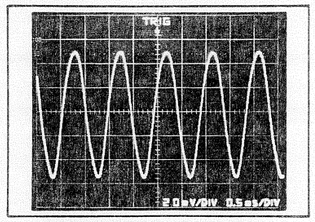

• SOUND SELECT .....FLUTE
• BALANCE (RIGHT) .....MAX
• MAIN VOLUME .....MAX
• Keyboard .....C_{52} Key

MAIN | HP | MIC

MAIN, HEADPHONES AND MICROPHONE CIRCUIT DIAGRAM

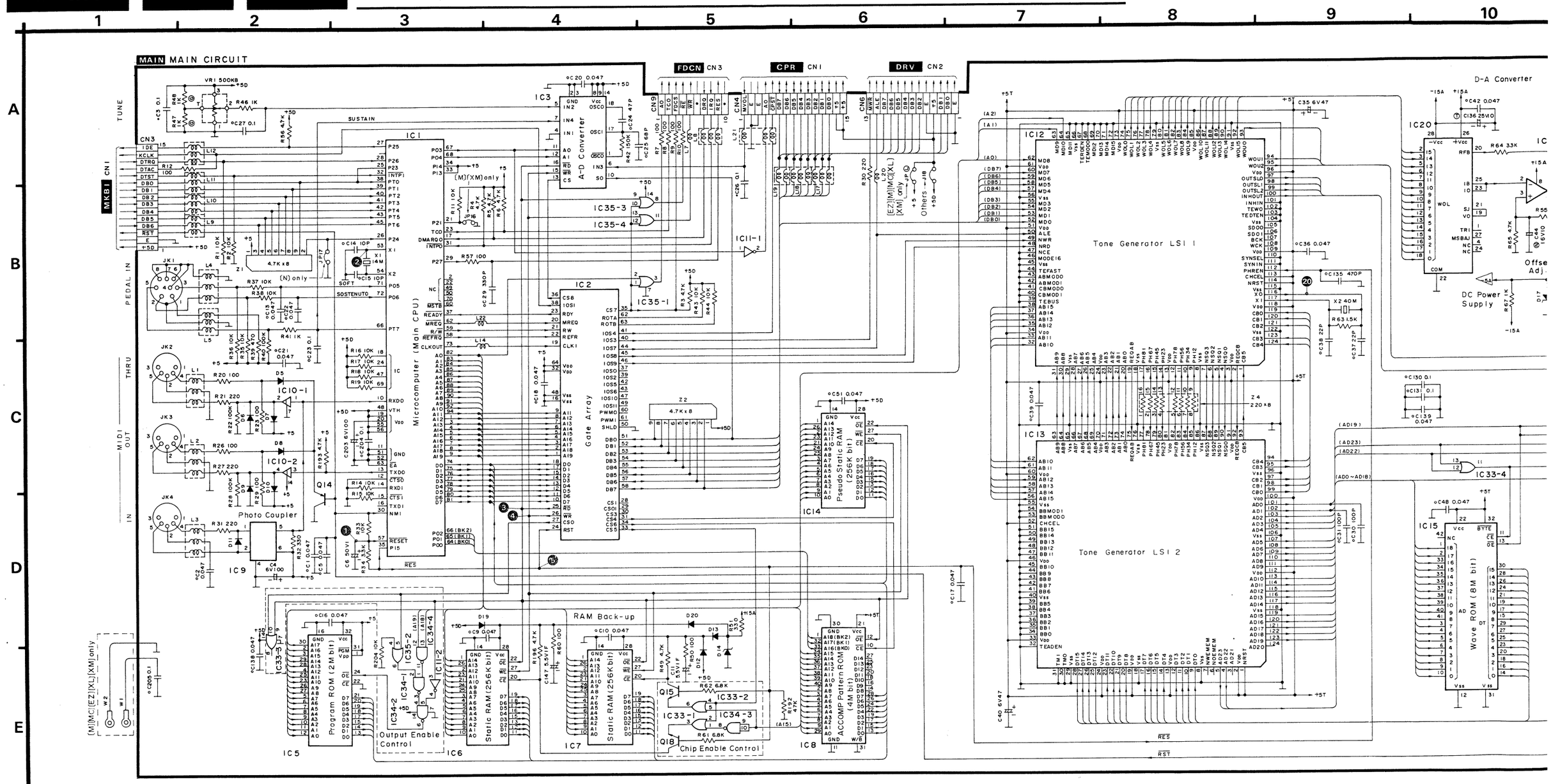

⑫

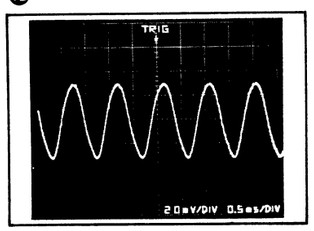

- SOUND SELECT .....FLUTE
- BALANCE (RIGHT) .....MAX
- MAIN VOLUME .....MAX
- Keyboard .....C_{52} Key

⑭

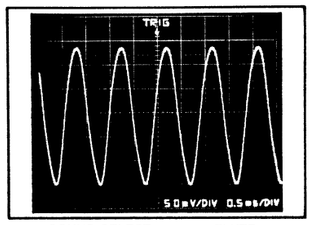

- SOUND SELECT .....FLUTE
- BALANCE (RIGHT) .....MAX
- MAIN VOLUME .....MAX
- Keyboard .....C_{52} Key

⑮

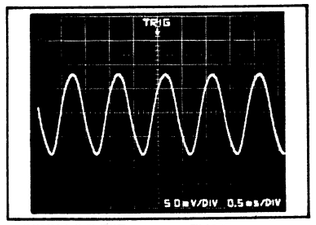

- SOUND SELECT .....FLUTE
- BALANCE (RIGHT) .....MAX
- MAIN VOLUME .....MAX
- Keyboard .....C_{52} Key

II-9

⑯

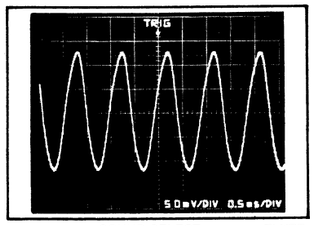

- SOUND SELECT .....FLUTE
- BALANCE (RIGHT) .....MAX
- MAIN VOLUME .....MAX
- Keyboard .....C_{52} Key

II-10

⑰

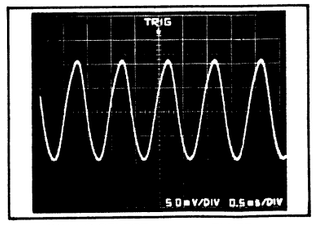

- SOUND SELECT .....FLUTE
- BALANCE (RIGHT) .....MAX
- MAIN VOLUME .....MAX
- Keyboard .....C_{52} Key

⑱ PMUT

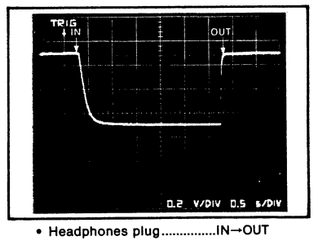

- Headphones plug .....IN→OUT

⑲ RS

- POW

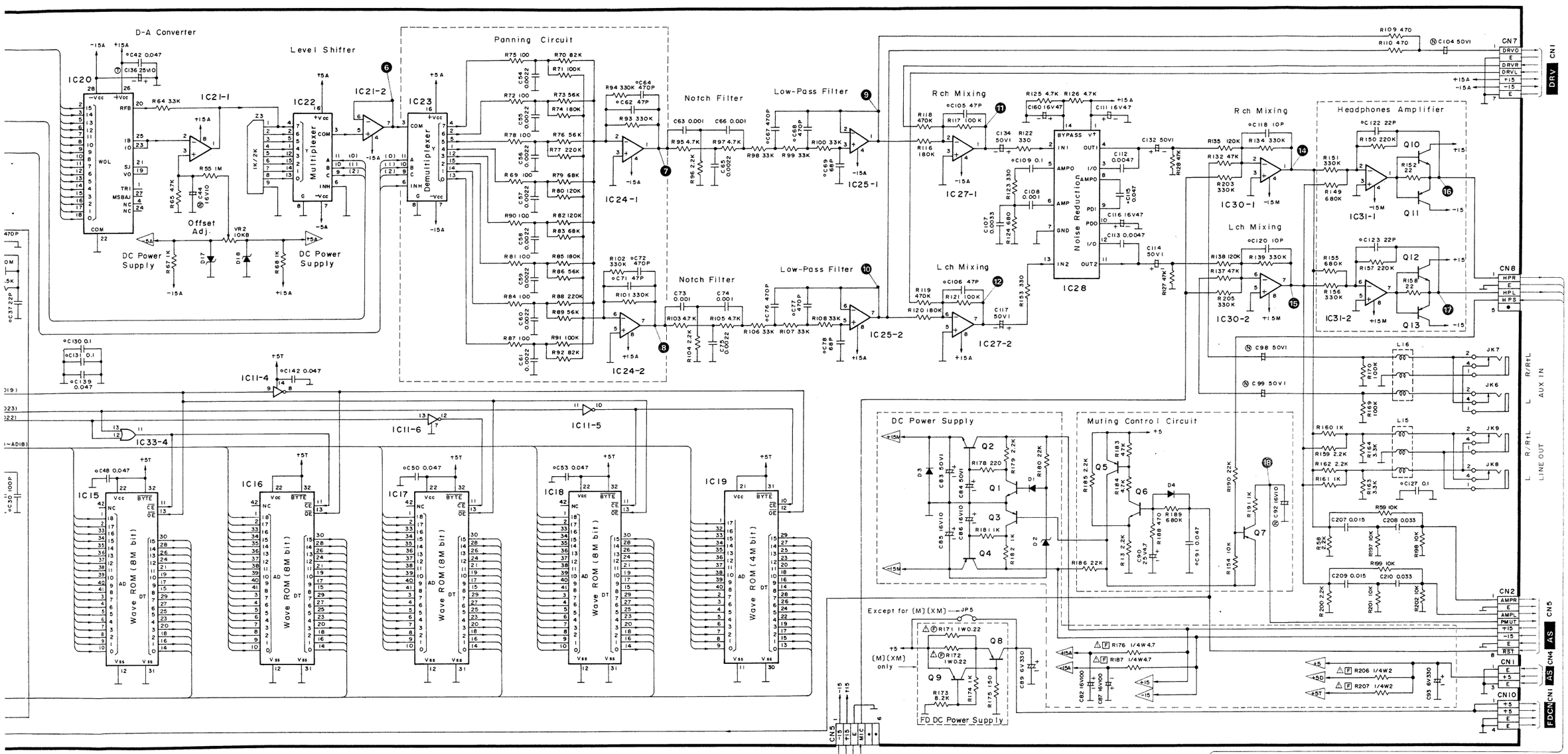

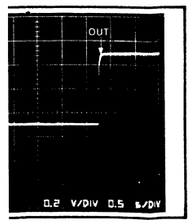

plug.....IN→OUT

⑲ $\overline{\text{RST}}$

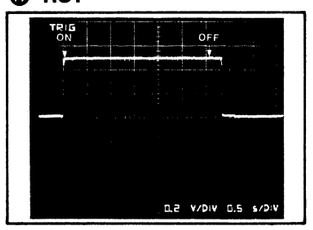

• POWER.....ON→OFF

⑳ X2, 40MHz

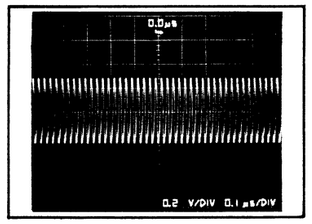

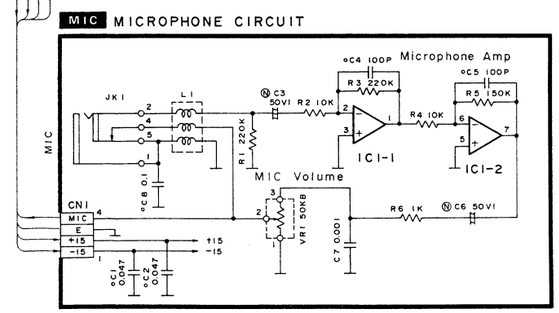

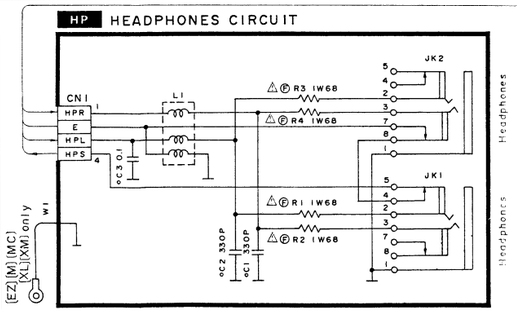

AS ACP PC AMP & POWER SUPPLY, AC POWER SUPPLY AND PEAK CANCELLER CIRCUIT

AS • [EZ] [M] [MC] [XL] [XM] areas **SXPG2037191A** • Other areas **SXPG2037181A**

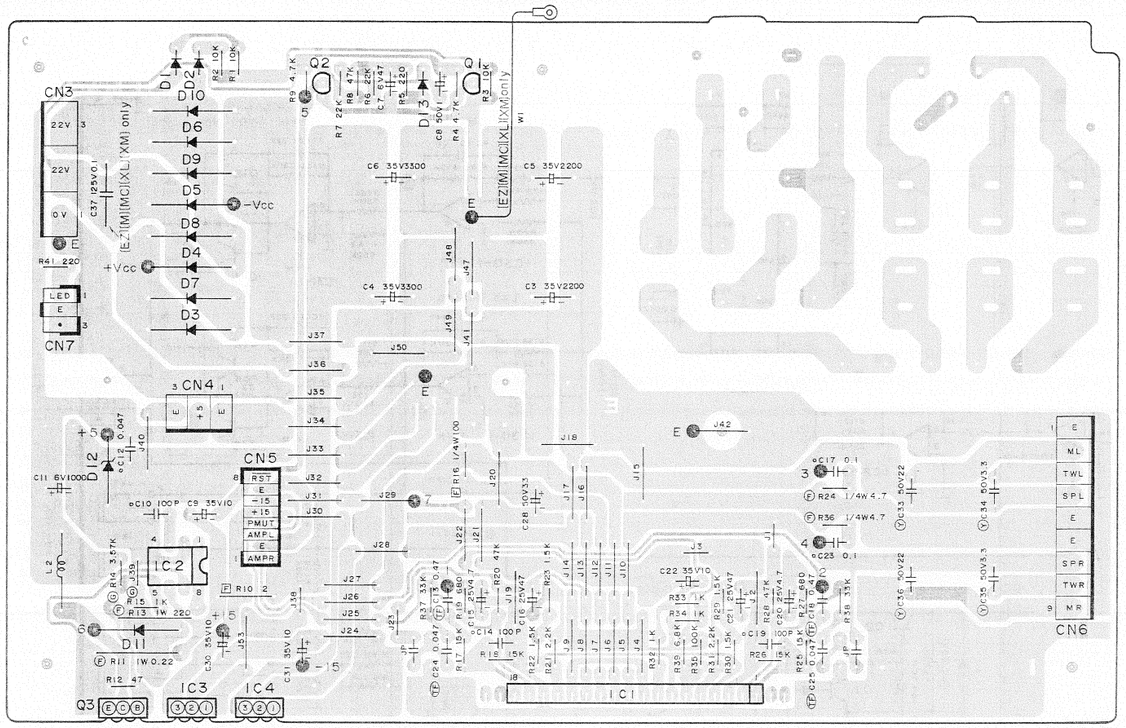

PC **SXPG204721**

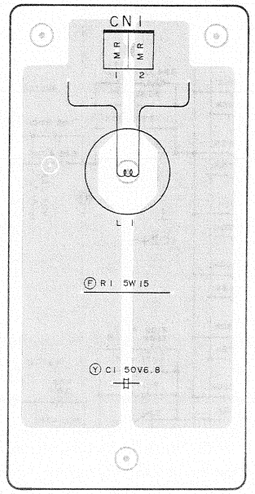

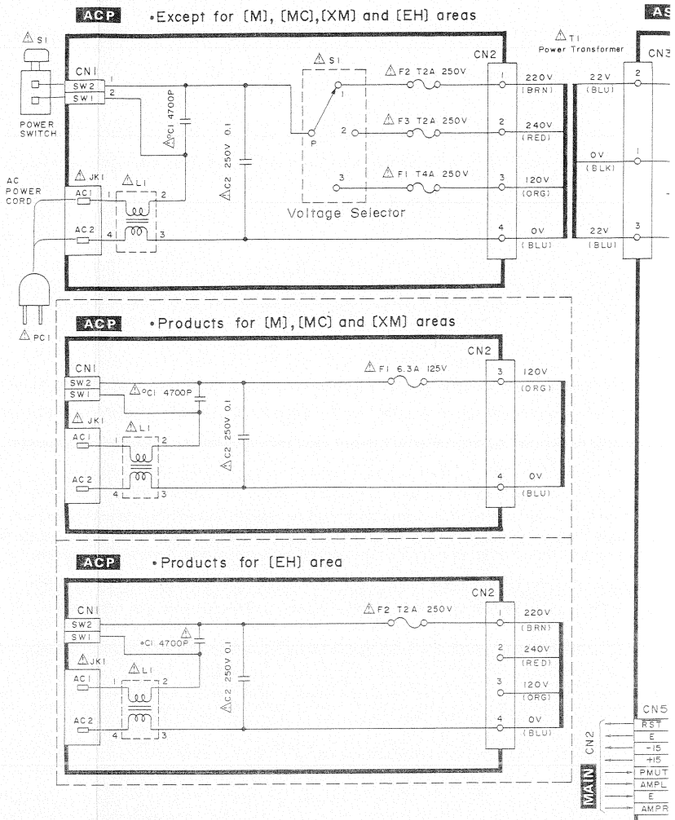

• Except for [M] [MC] [XM] [EH] [XL] [XR] areas **SXPG204911A**

ACP • [XL] [XR] areas **SXPG204941A**

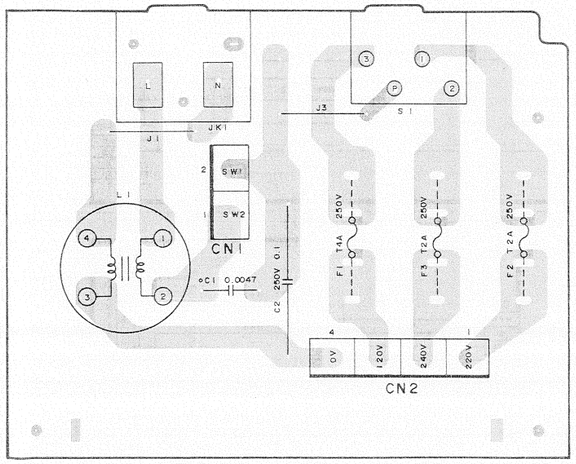

NOTES:
• FUSES
F1: XBA2C40TB0
F2: XBA2C20TB0

ACP • [M] [MC] [XM] areas **SXPG204931A**

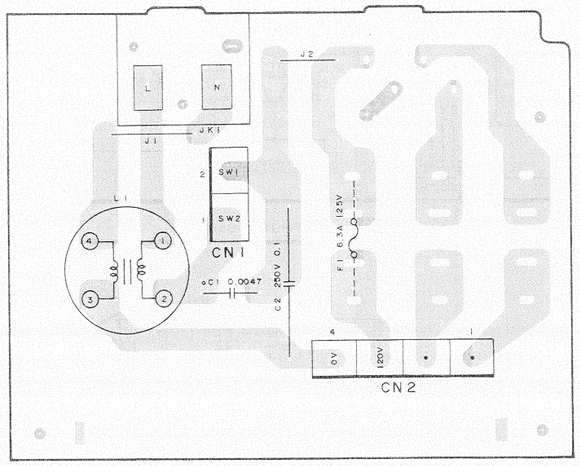

NOTES:
• FUSE
F1: XBA1C63NU100

ACP • [EH] area **SXPG204951A**

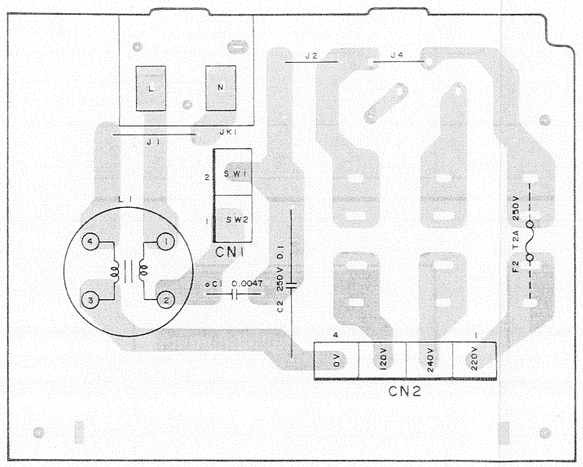

NOTES:
• FUSE
F2: XBA2C20TB0

AS

NOTES:
• IC'S

IC1:	SVIGS4172M2M
IC2:	SVIGM5291P
IC3:	SVIGM5F7815
IC4:	SVIGM5F7915

• TRANSISTORS

Q1, 2:	2SC2320LFG
Q3:	2SB953AQP

• DIODES

D1, 2:	SVDGERA1502Y
D3~10:	SVDGS3V20-15
D11:	SVDGRK14S
D12:	MA2062LF
D13:	MA165TA5

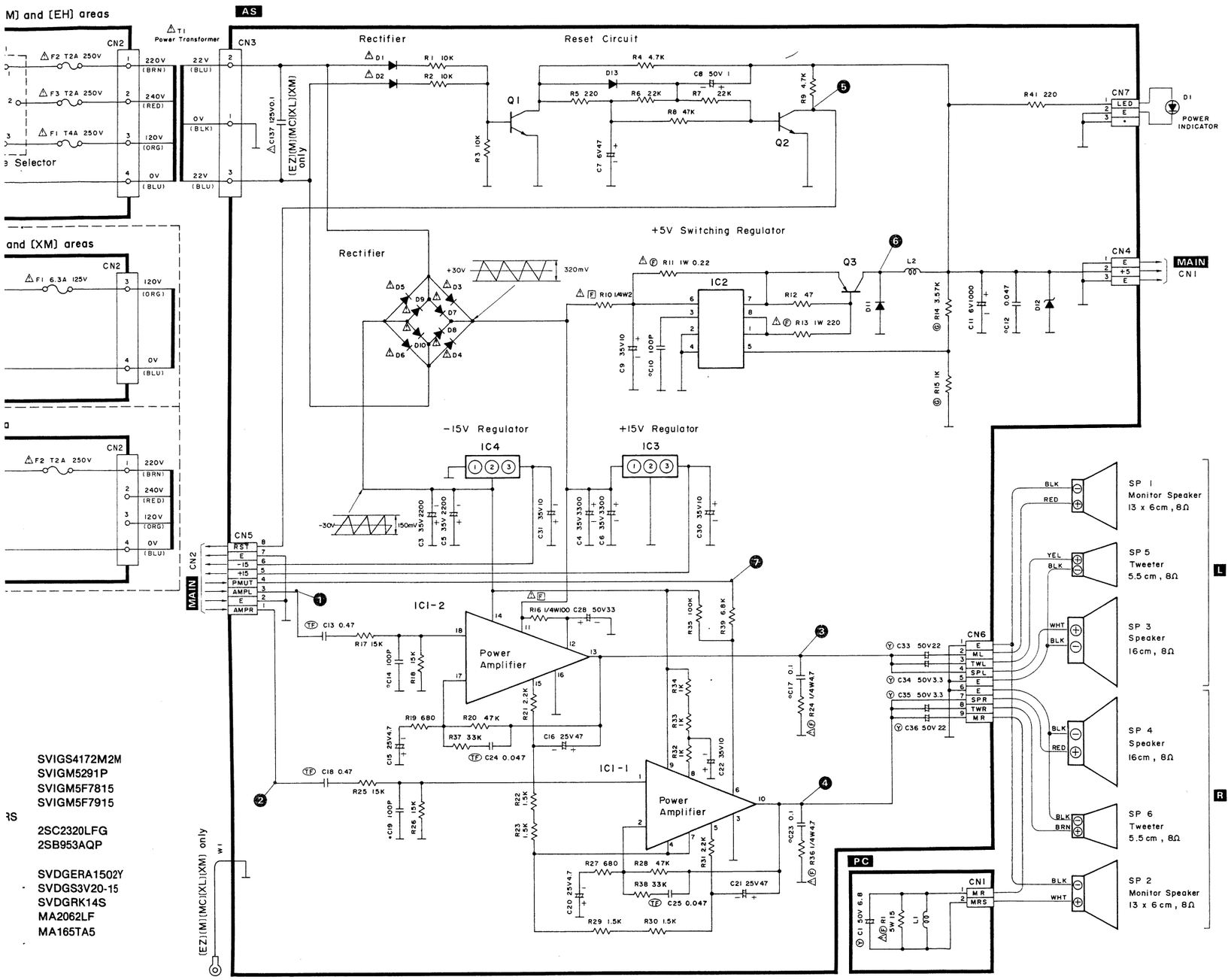

SVIGS4172M2M
SVIGM5291P
SVIGM5F7815
SVIGM5F7915

2SC2320LFG
2SB953AQP

SVDGERA1502Y
SVDGS3V20-15
SVDGRK14S
MA2062LF
MA165TA5

■ Waveform measurement

1. Activate the initial setting method. (Refer to page I-16)
2. Set the touch sensitivity level to the "0". (Refer to page I-16)
3. Set the D. Piano to required mode following each checkpoint(s).

❶

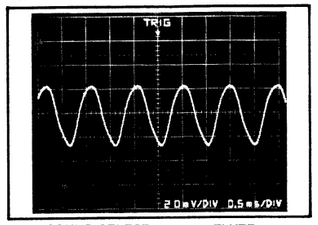

- SOUND SELECT.....FLUTE
- BALANCE (RIGHT).....MAX
- MAIN VOLUME.....MAX
- Keyboard.....C_{52} Key

❷

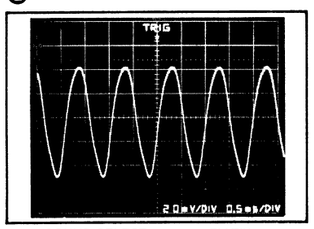

- SOUND SELECT.....FLUTE
- BALANCE (RIGHT).....MAX
- MAIN VOLUME.....MAX
- Keyboard.....C_{52} Key

❸

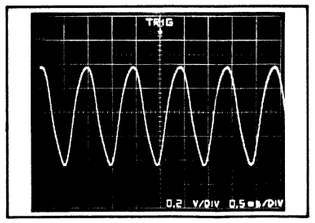

- SOUND SELECT.....FLUTE
- BALANCE (RIGHT).....MAX
- MAIN VOLUME.....MAX
- Keyboard.....C_{52} Key

❹

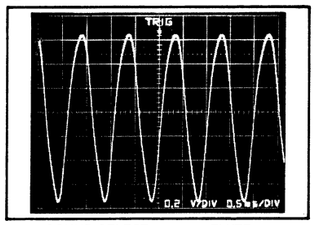

- SOUND SELECT.....FLUTE
- BALANCE (RIGHT).....MAX
- MAIN VOLUME.....MAX
- Keyboard.....C_{52} Key

❺ $\overline{\text{RST}}$

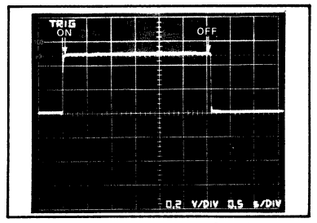

- POWER.....ON→OFF

❻

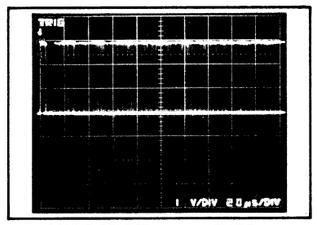

- SOUND SELECT.....FLUTE
- BALANCE (RIGHT).....MAX
- MAIN VOLUME.....MAX
- Keyboard.....C_{52} Key

❼ PMUT

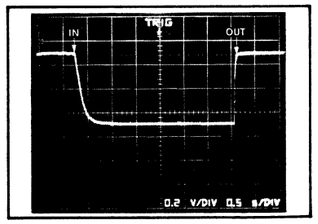

- Headphones plug.....IN→OUT

DIGITAL REVERB CIRCUIT DIAGRAM AND CIRCUIT BOARD

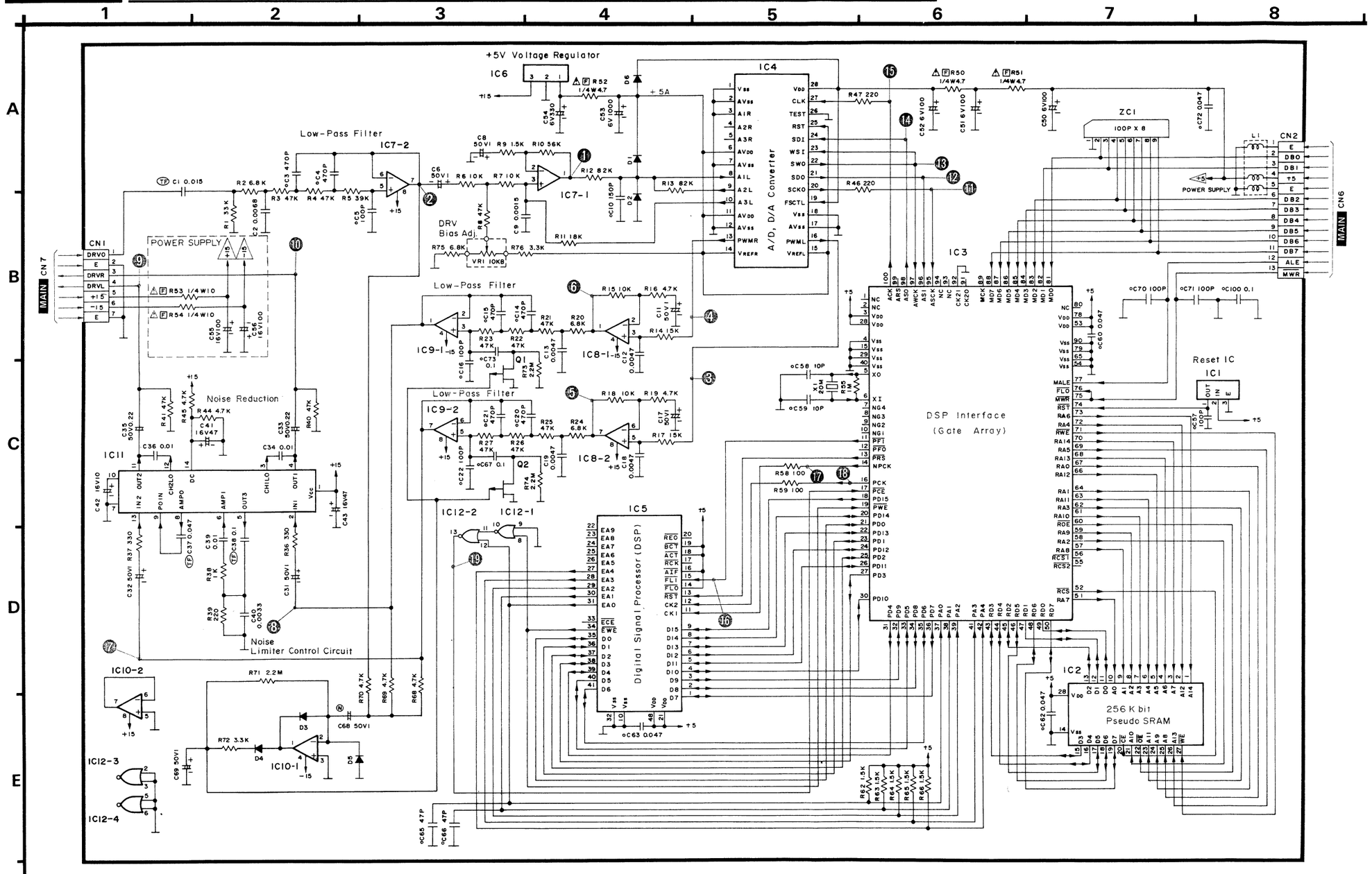

■ Waveform measurement

1. Activate the initial setting method. (Refer to page I-16)
2. Set the touch sensitivity level to the "0". (Refer to page I-16)
3. Set the D. Piano to required mode followings.
   - SOUND SELECT.....FLUTE
   - DIGITAL REVERB.....STAGE
   - BALANCE (RIGHT).....MAX
   - MAIN VOLUME.....MAX
   - Keyboard.....C_{52} Key

❶

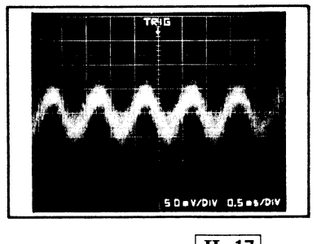

II-17

❷

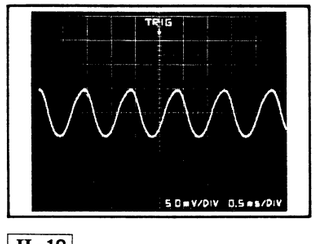

II-18

❸ ❹

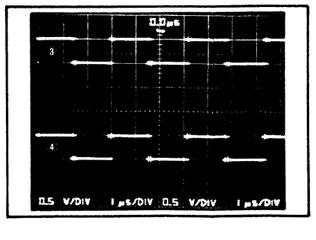

9 10 11 12 13 14

Circuit view on top of P.C.B.

SXPG146041

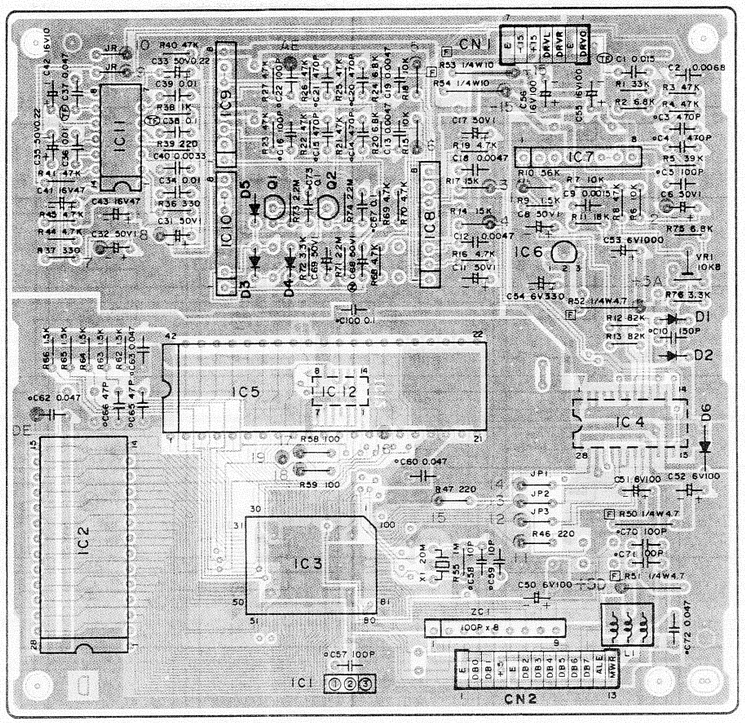

NOTES:

- IC'S

IC1:	MN1280R
IC2:	SVIGHM65256
IC3:	SVIGMB622416
IC4:	MN8305S
IC5:	SVIG87064075
IC6:	SVIGM5278L05
IC7:	SVIGM5220L
IC8～10:	SVIGM5218L
IC11:	SVIGLM1894N
IC12:	MN74HC02S

- TRANSISTORS

Q1, 2:	2SJ105GR

- DIODES

D1～5:	MA165TA5
D6:	EK04

❺ ❻

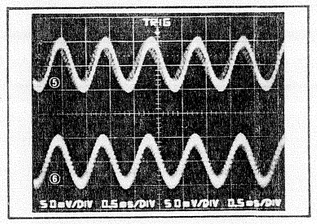

❼ ❽

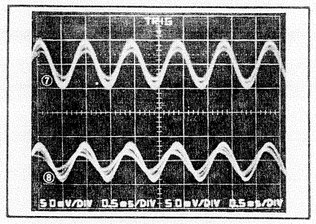

❾ ❿

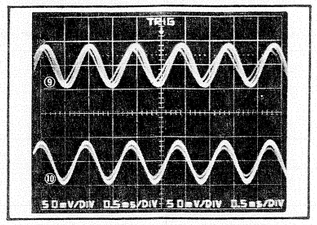

⓫

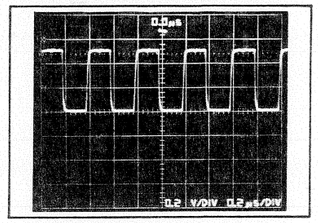

⓬

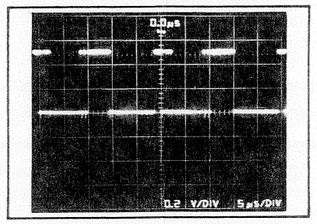

⓭

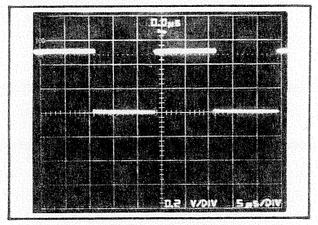

⓮

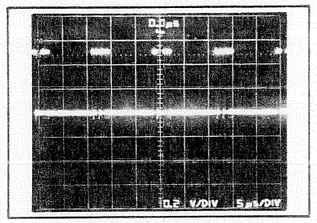

⓯

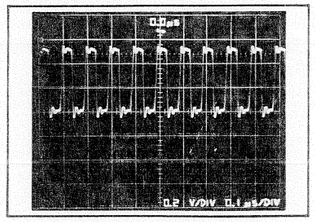

⓰

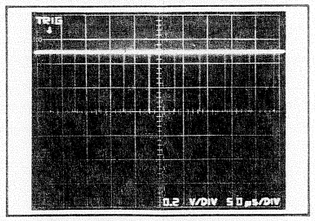

⓱

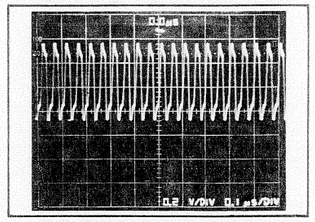

⓲

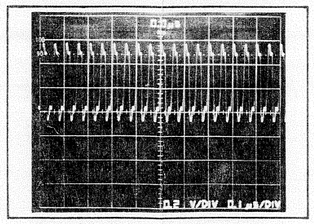

⓳

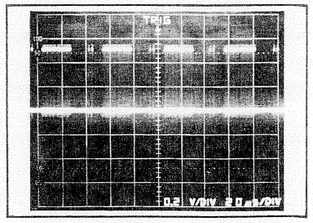

CONTROL PANEL RIGHT AND FD CONNECTOR CIRCUIT DIAGRAM

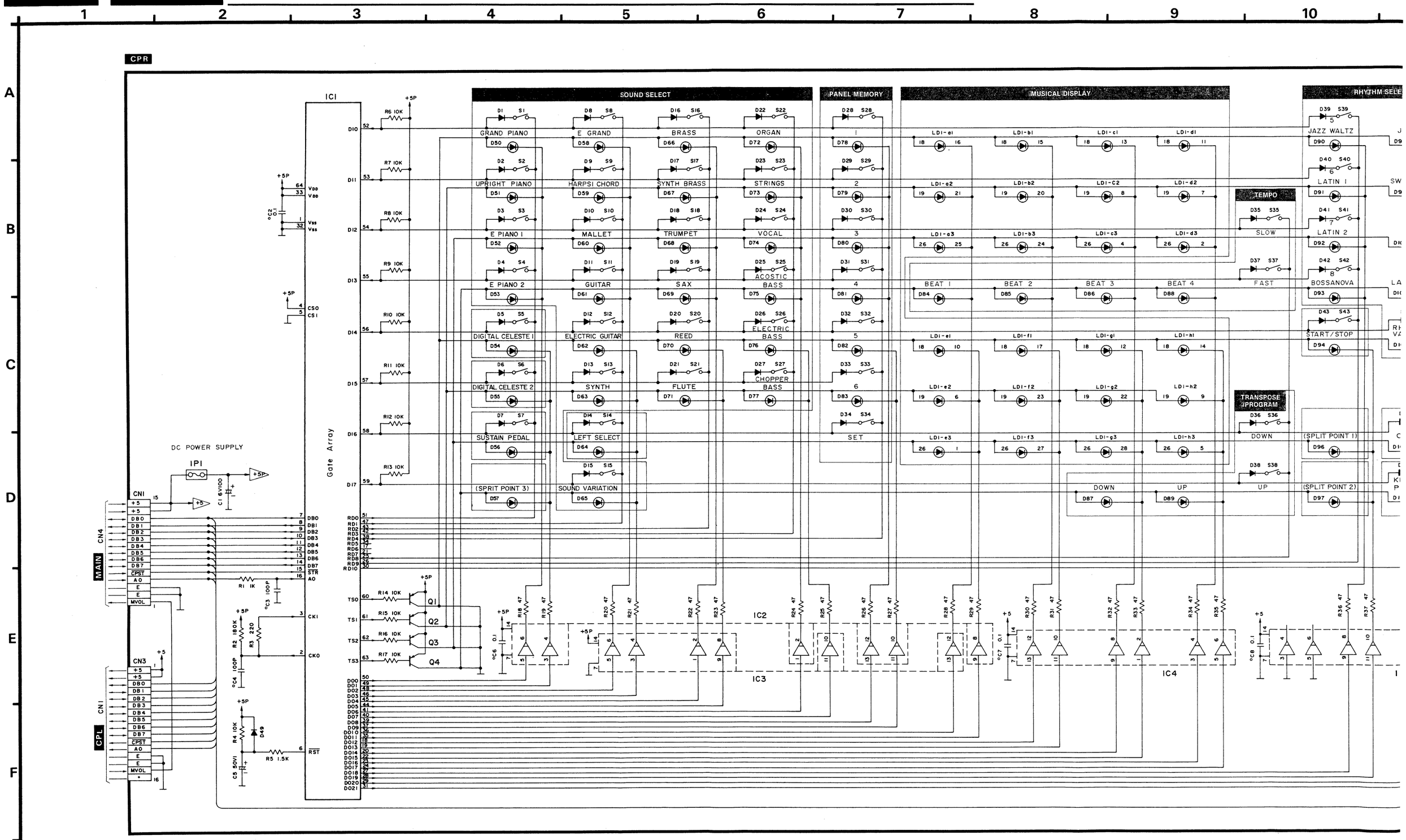

CONNECTOR CIRCUIT DIAGRAM

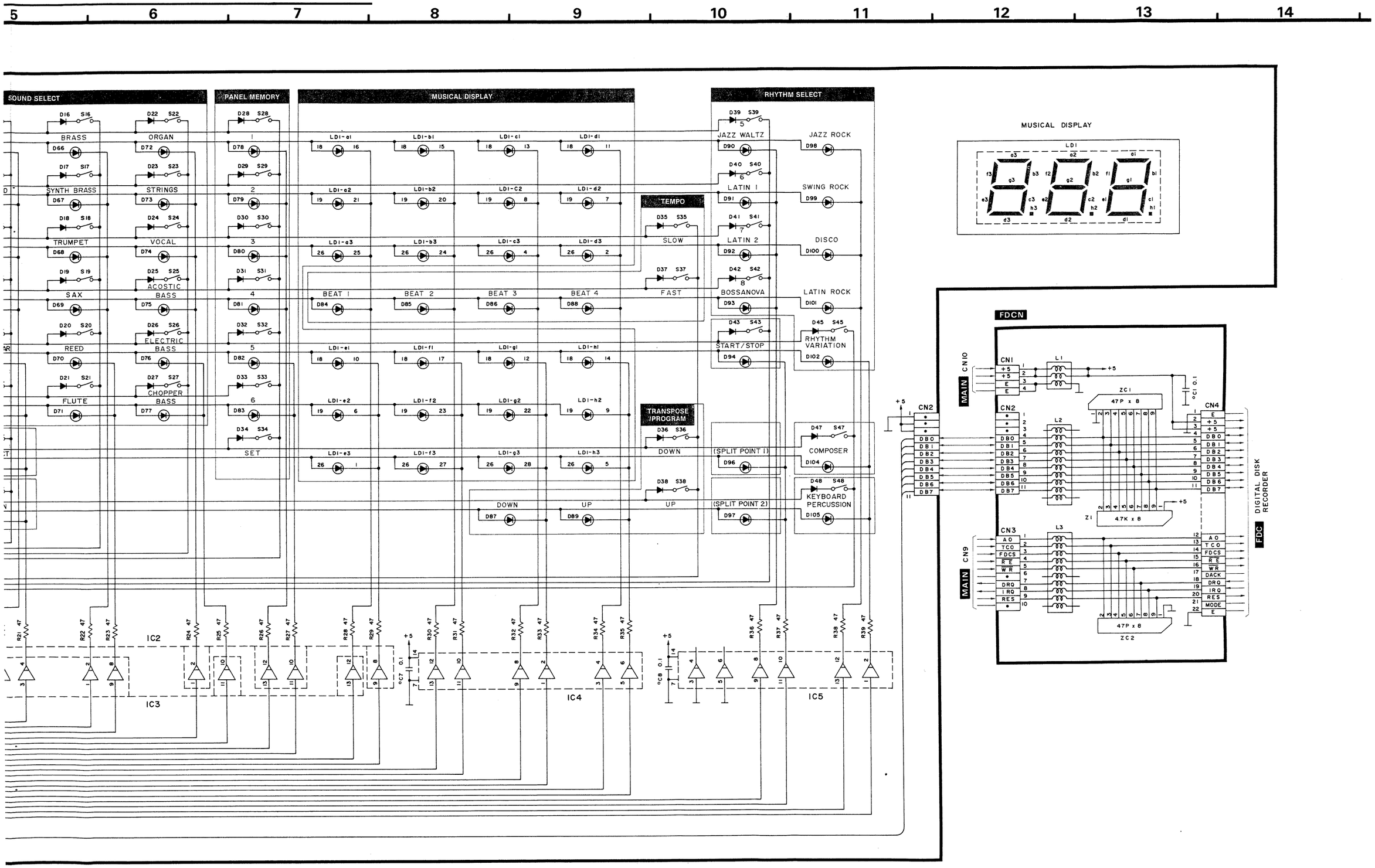

CONTROL PANEL RIGHT AND FD CONNECTOR CIRCUIT BOARD

CPR

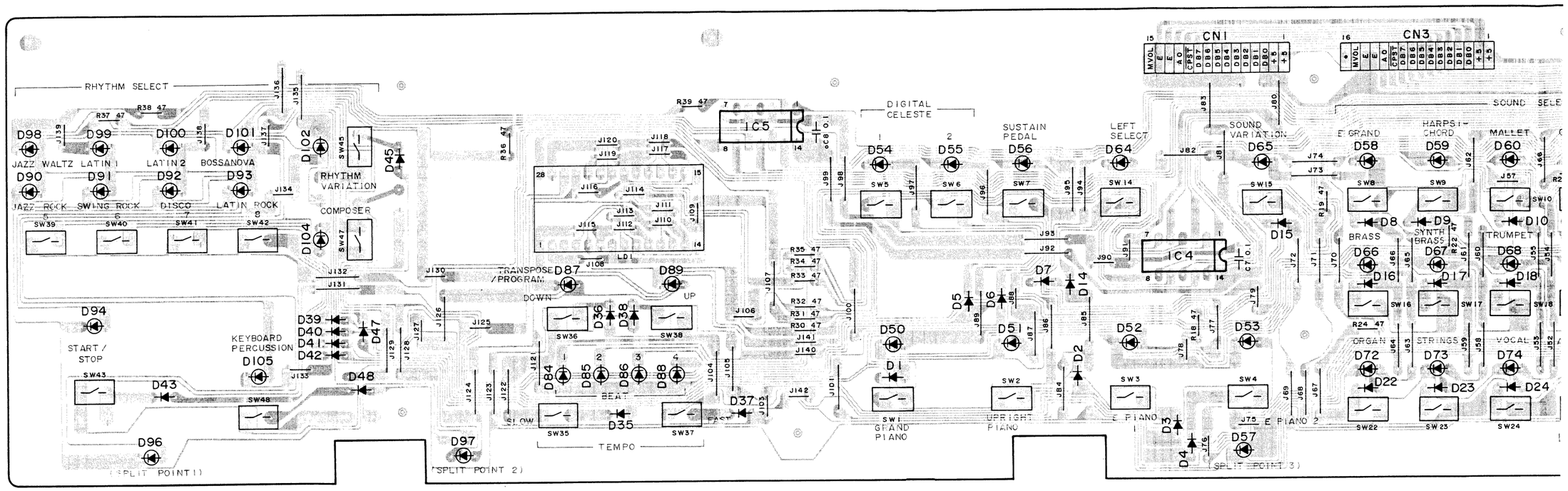

FDCN

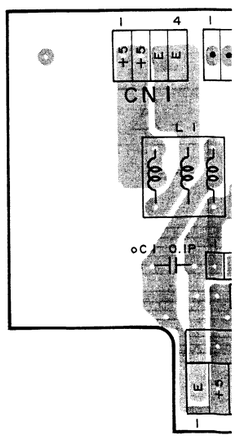

CPR

NOTES:

- IC'S
  - IC1: SVIGM603A121
  - IC2~5: SVIGM74LS07
- TRANSISTORS
  - Q1~4: 2SA830SB
- DIODES
  - D1~43, 45, 47~49: MA165TA5
  - D50~77, 84, 87, 89~94, 96~102, 105: LN282R
  - D78~83, 85, 86, 88, 104: LN382G

D FD CONNECTOR CIRCUIT BOARD

5 6 7 8 9 10 11 12 13 14

SXPG204511B

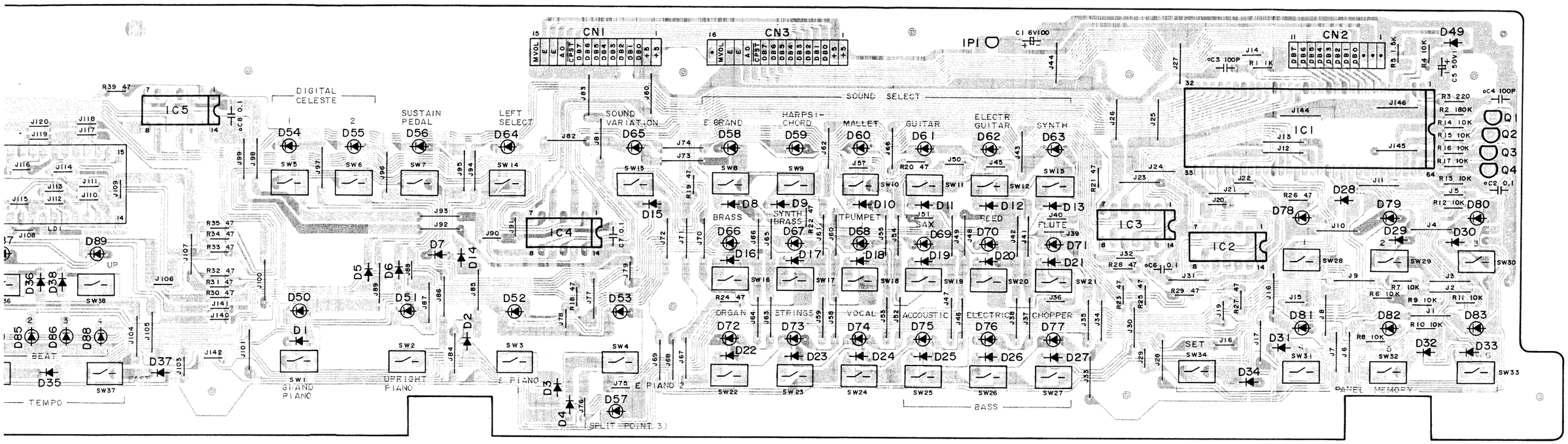

FDCN

SXPG204911B

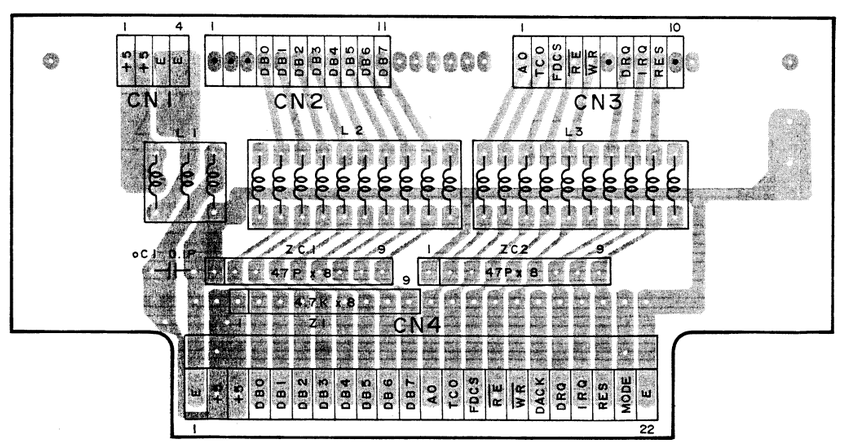

CONTROL PANEL LEFT AND SEQUENCER CONTROL CIRCUIT DIAGRAM

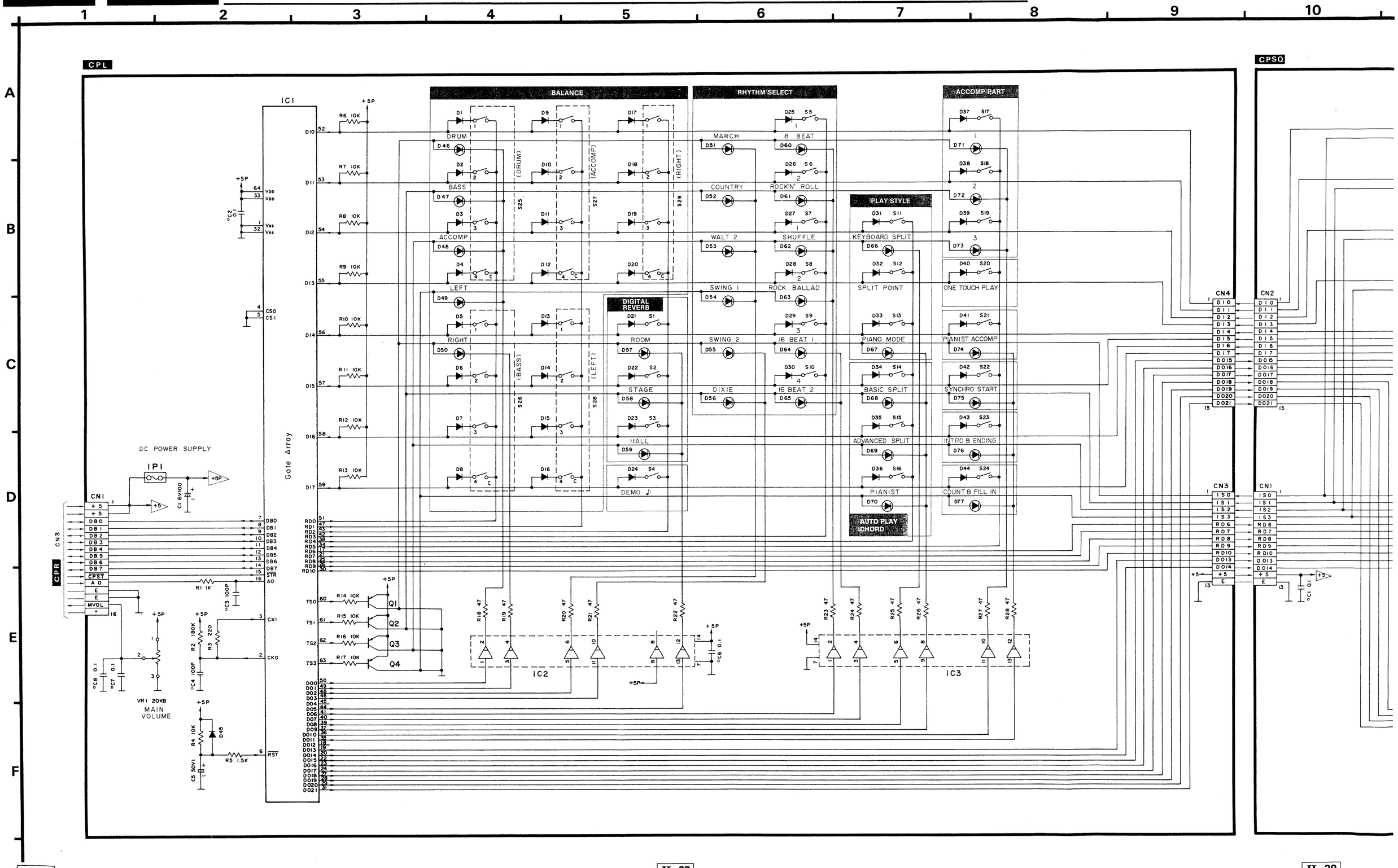

JENCER CONTROL CIRCUIT DIAGRAM

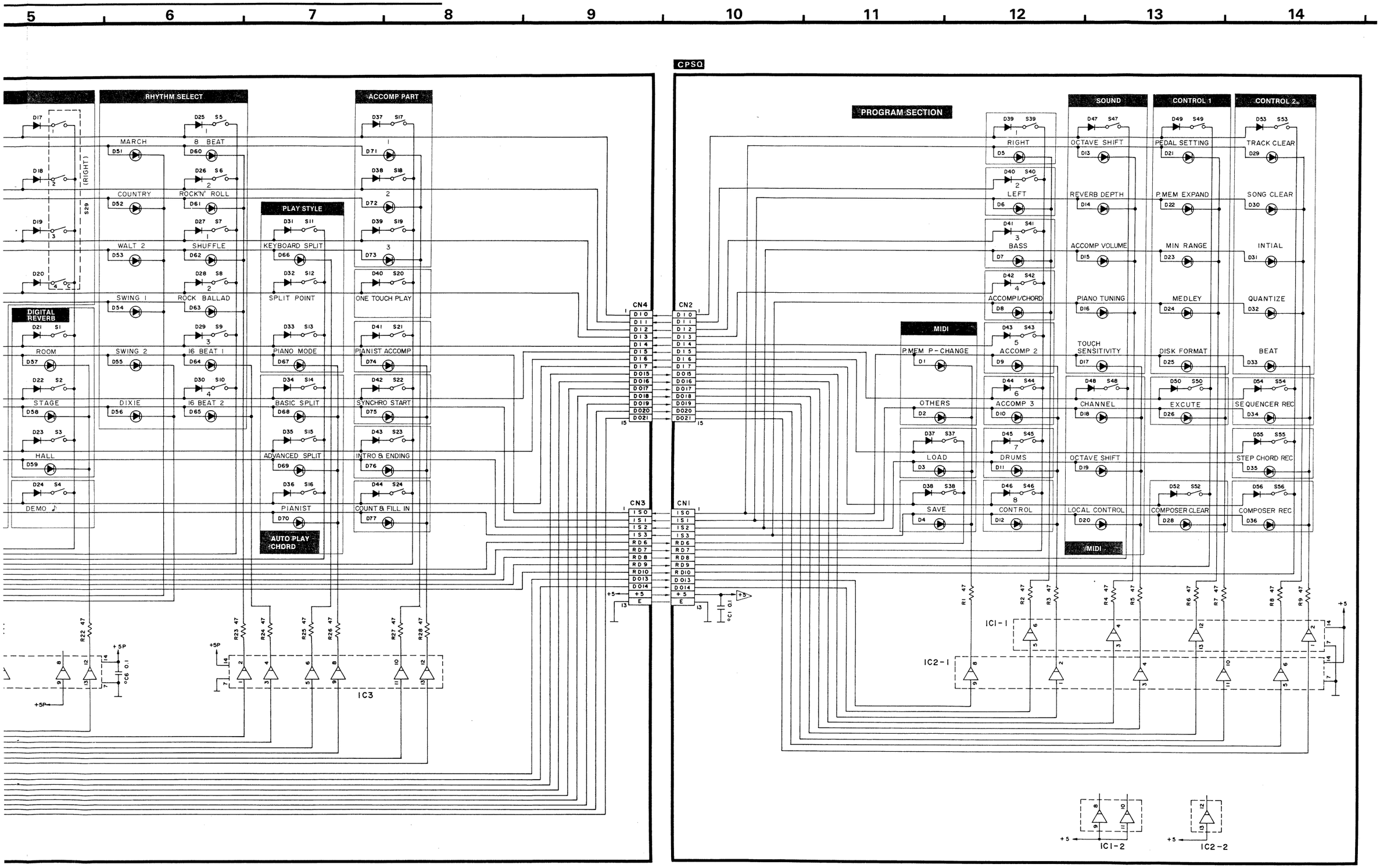

CPL CPSQ CONTROL PANEL LEFT AND SEQUENCER CONTROL CIRCUIT BOARD

CPL

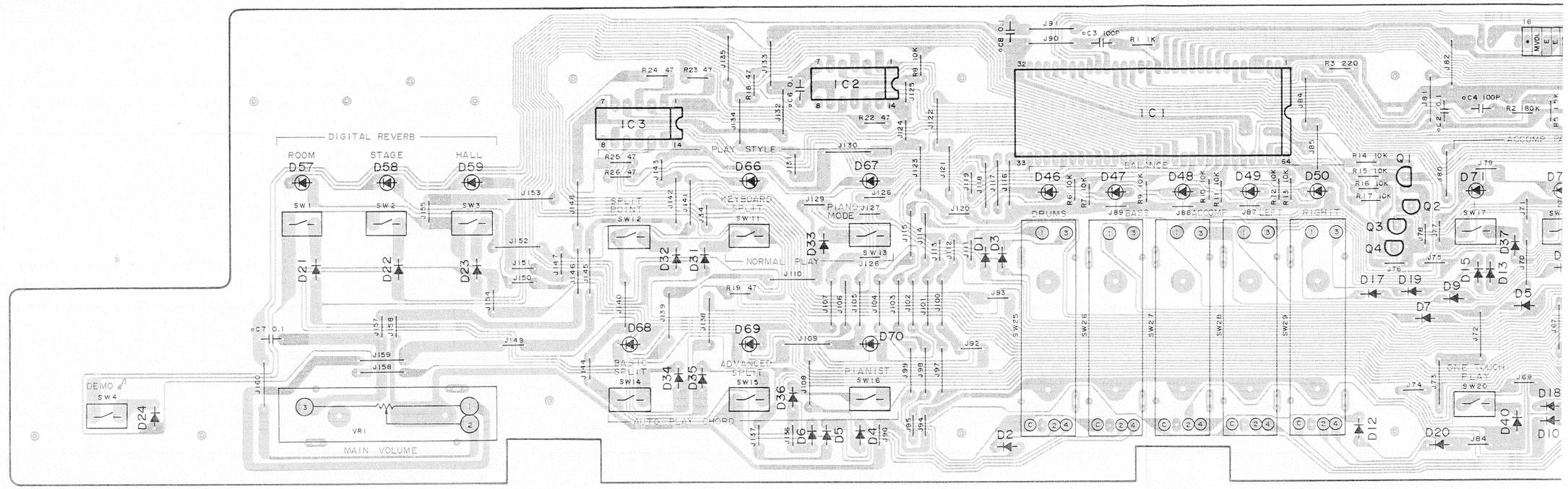

CPSQ

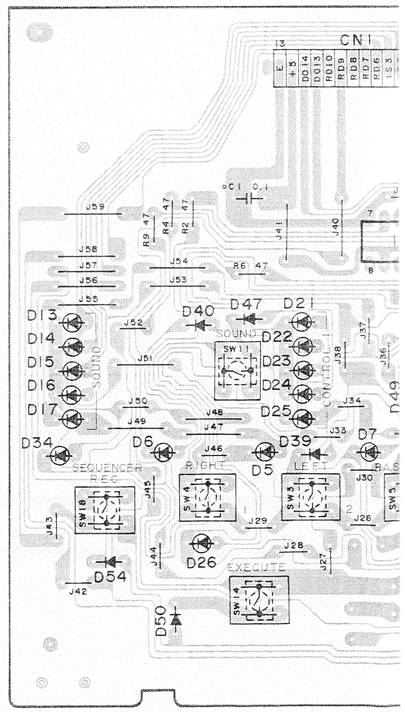

CPL

NOTES:

- IC'S
  - IC1: SVIGM603A121
  - IC2, 3: SVIGM74LS07
- TRANSISTORS
  - Q1~4: 2SA830SB
- DIODES
  - D1~45: MA165TA5
  - D46~77: LN282R

D SEQUENCER CONTROL CIRCUIT BOARD

SXPG204511A

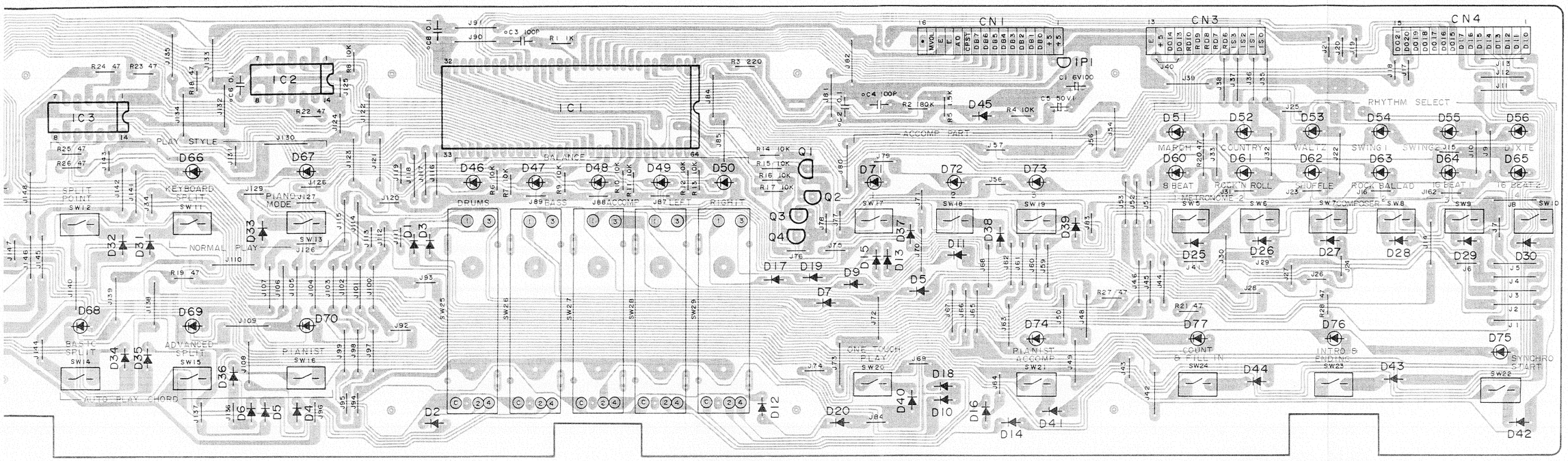

CPSQ

SXPG205211

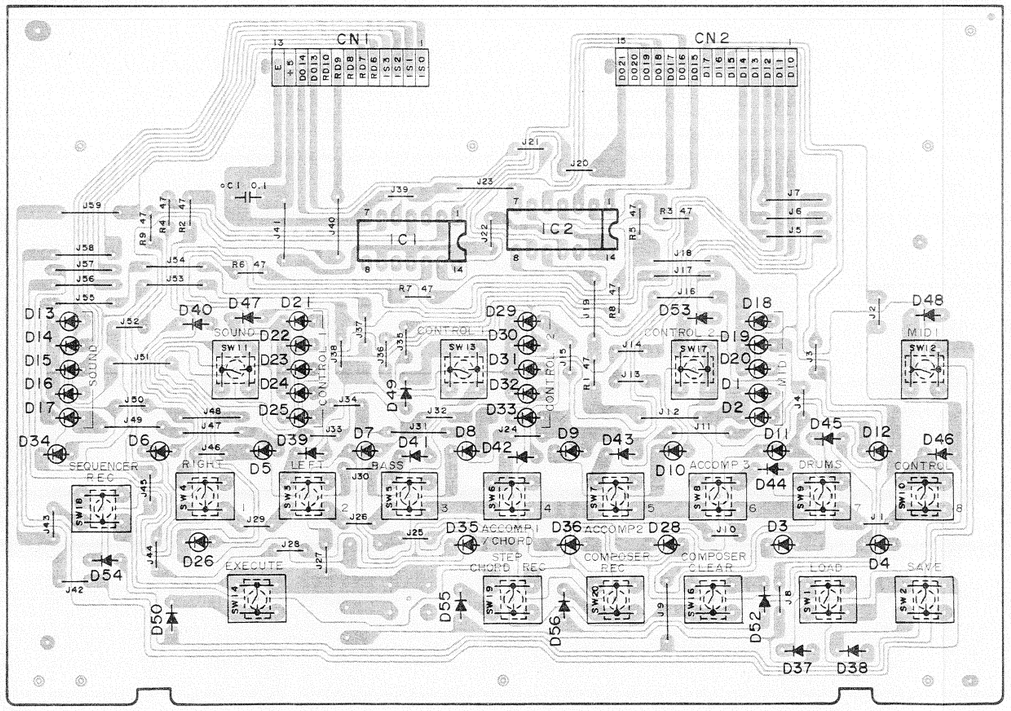

CPSQ

NOTES:

- IC'S

IC1, 2:	SVIGM74LS07

- DIODES

D1, 2, 13~25, 29~33:	LN282R
D3~12, 26, 28, 34~36:	LN382G
D37~50, 52~56:	MA165TA5

MANUAL KEYBOARD 1, 2 CIRCUIT DIAGRAM AND CIRCUIT BOARD

MKB1 MANUAL KEYBOARD 1 CIRCUIT DIAGRAM

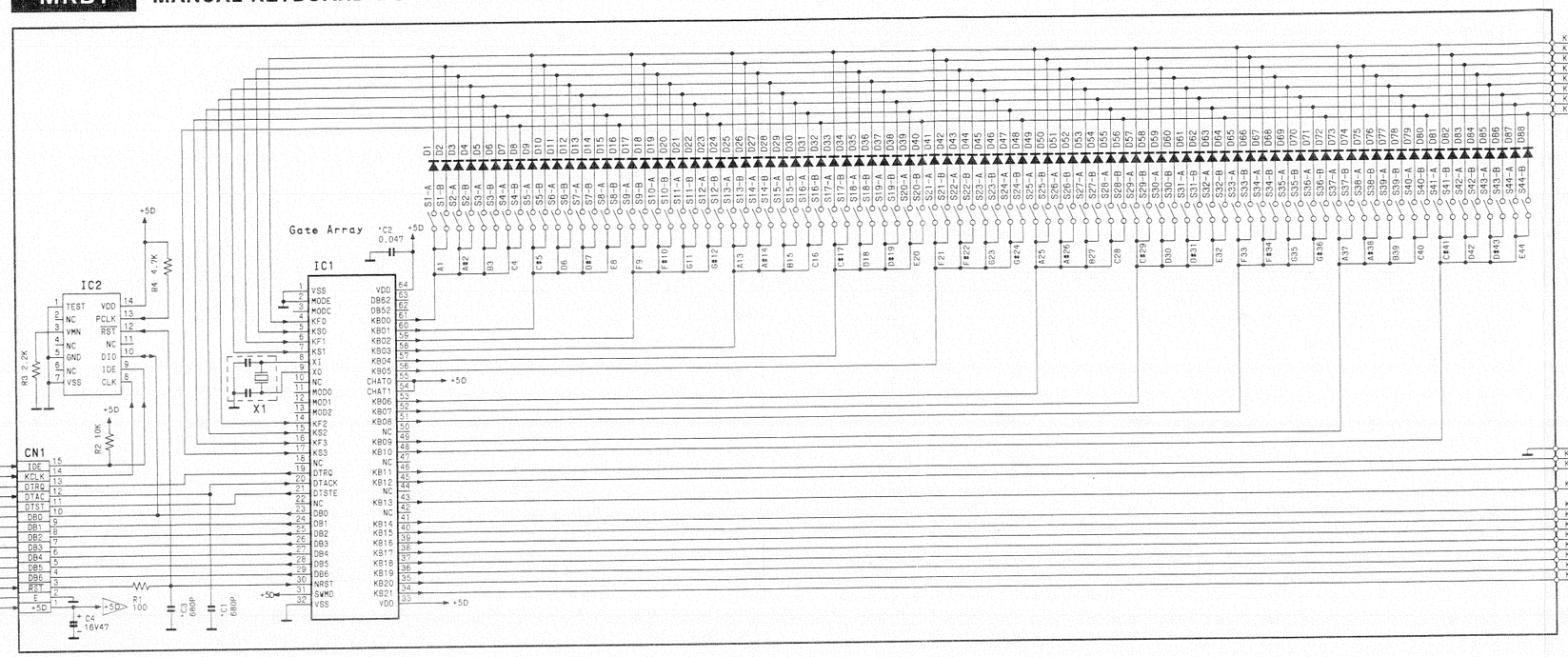

MKB2 MANUAL KEYBOARD 2 CIRCUIT DIA

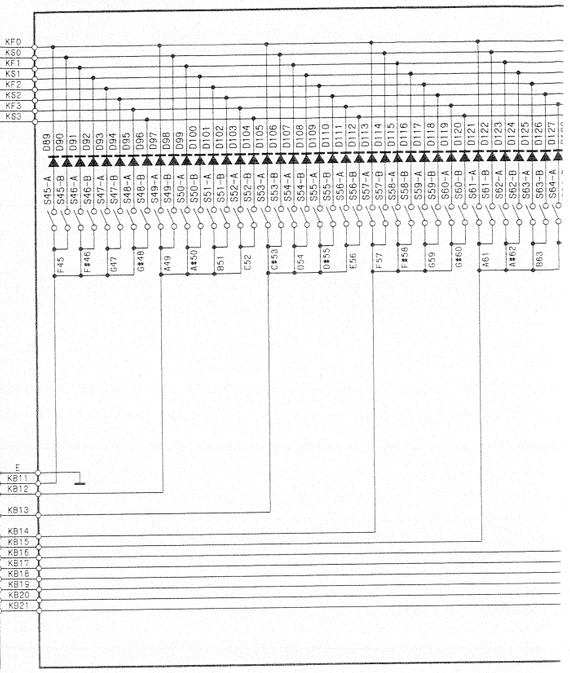

MKB1 MANUAL KEYBOARD 1 CIRCUIT BOARD

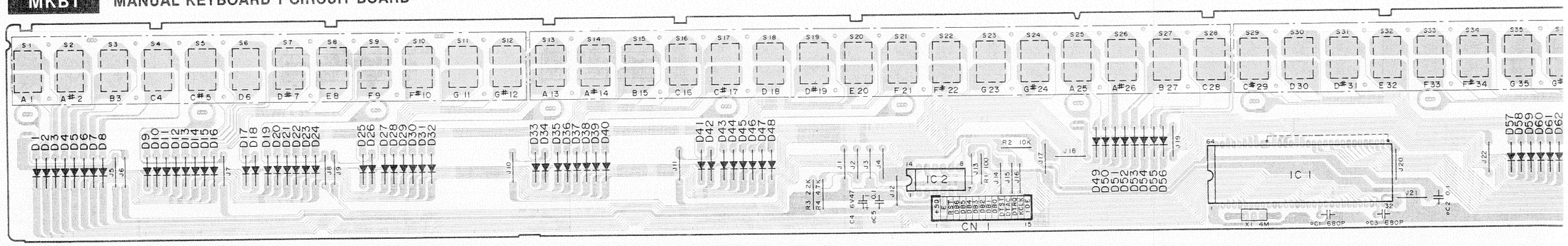

MKB2 MANUAL KEYBOARD 2 CIRCUIT BOARD

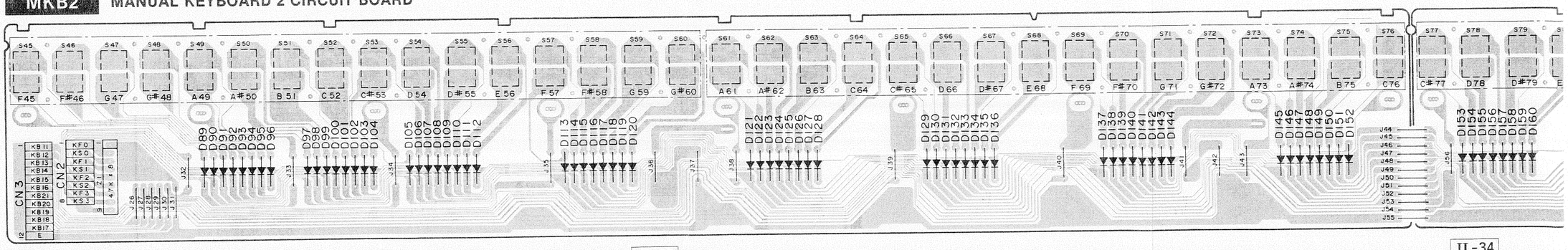

RCUIT DIAGRAM AND CIRCUIT BOARD

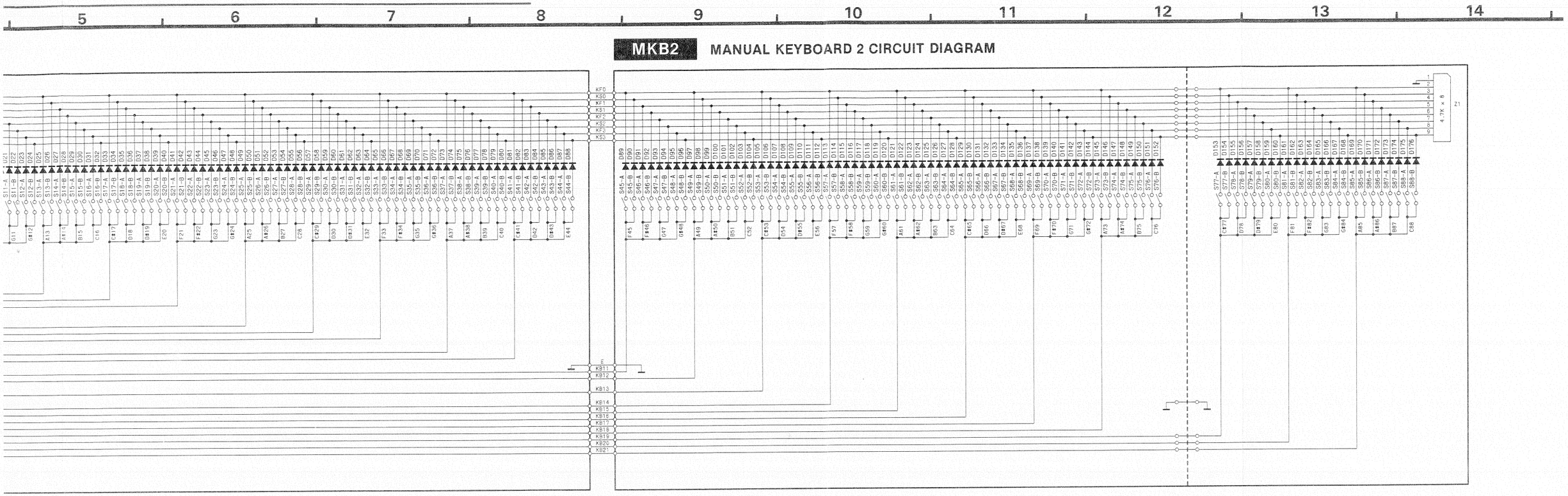

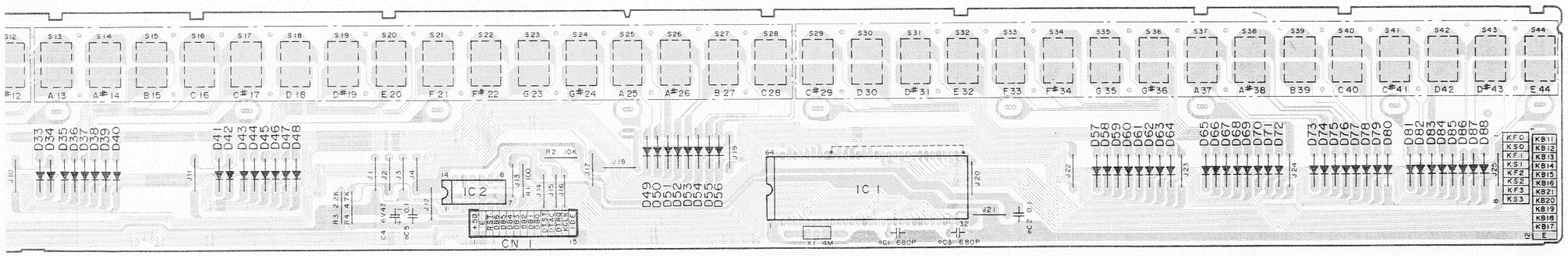

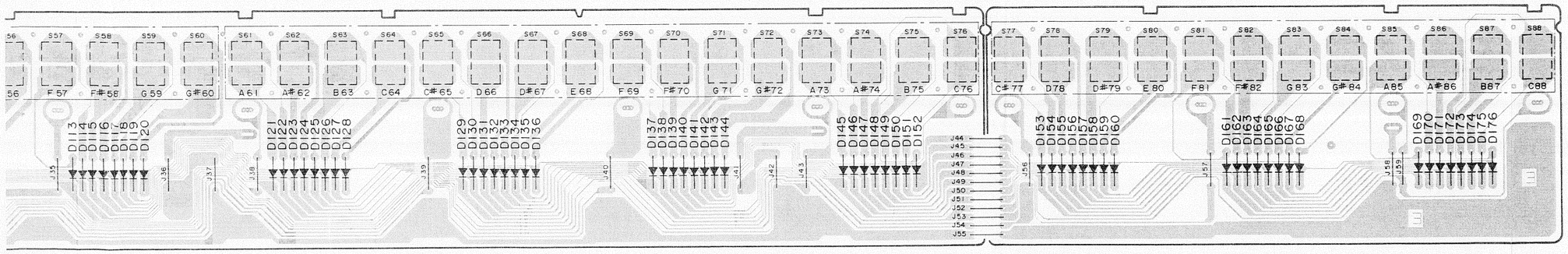

SXPG203811A

NOTES:
- IC'S
  - IC1: MN50020PGV
  - IC2: MN1231
- DIODES
  - D1~88: MA162A

SXPG203811B

NOTES:
- DIODES
  - D89~176: MA162A

FDC FD CONTROL CIRCUIT

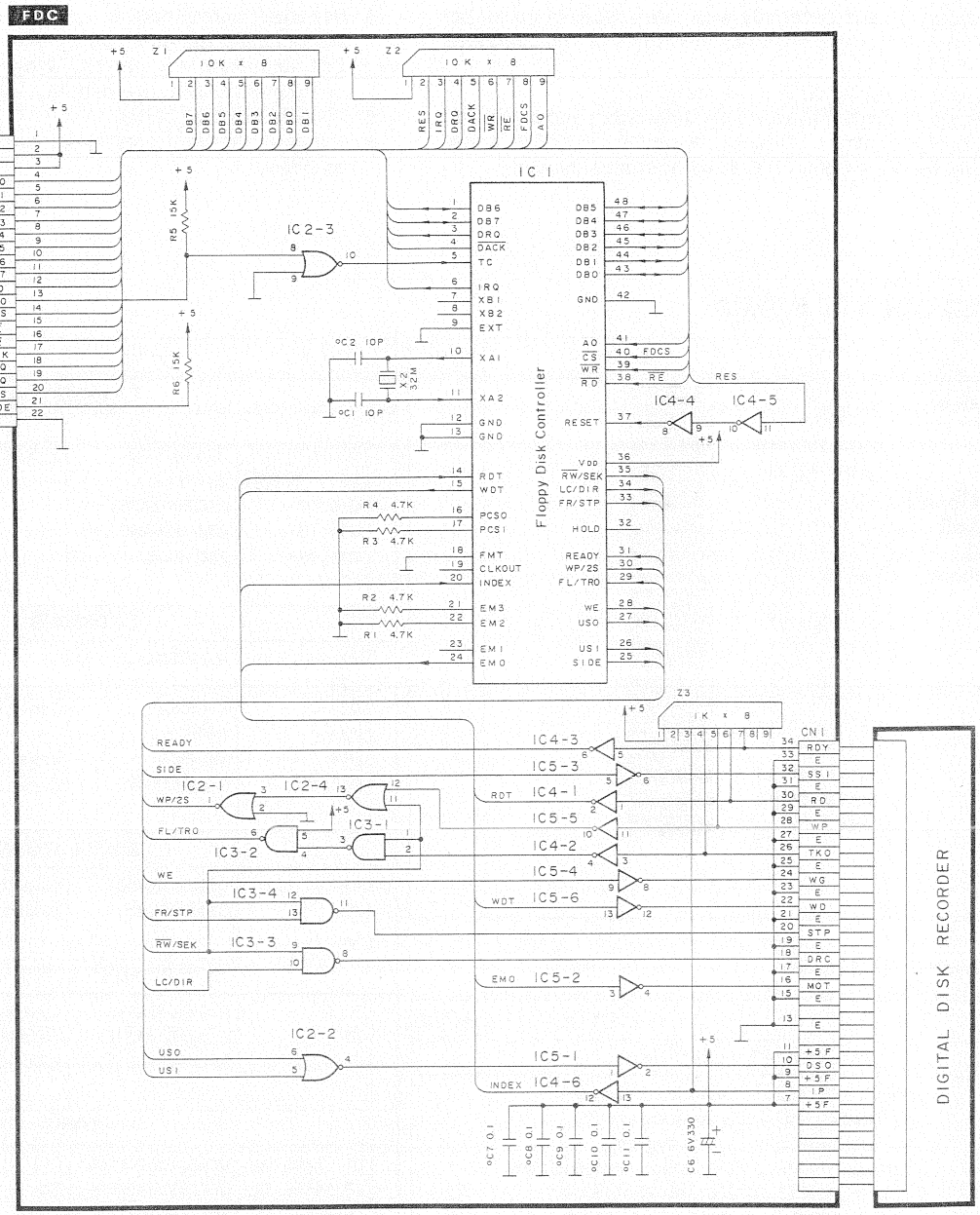

Circuit view on top of P.C.B.

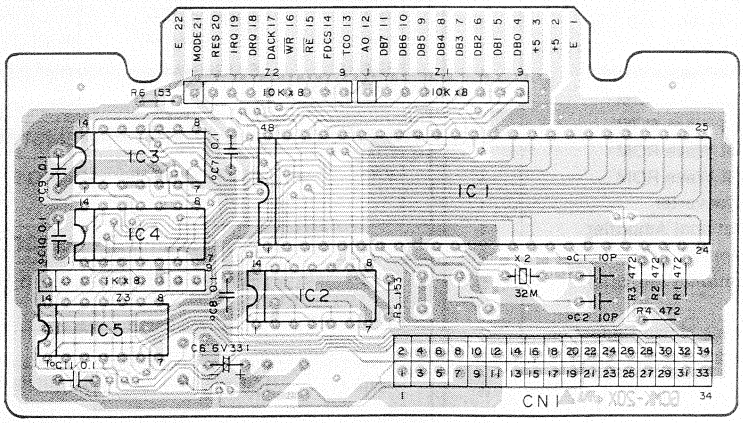

SXPG146111

NOTES:

- IC'S

IC1:	SVIGD72067C
IC2:	SVIGM74H02
IC3:	SVIGM74H00
IC4:	SVIGM74H14
IC5:	SVIGM74H04

FD CONTROL CIRCUIT

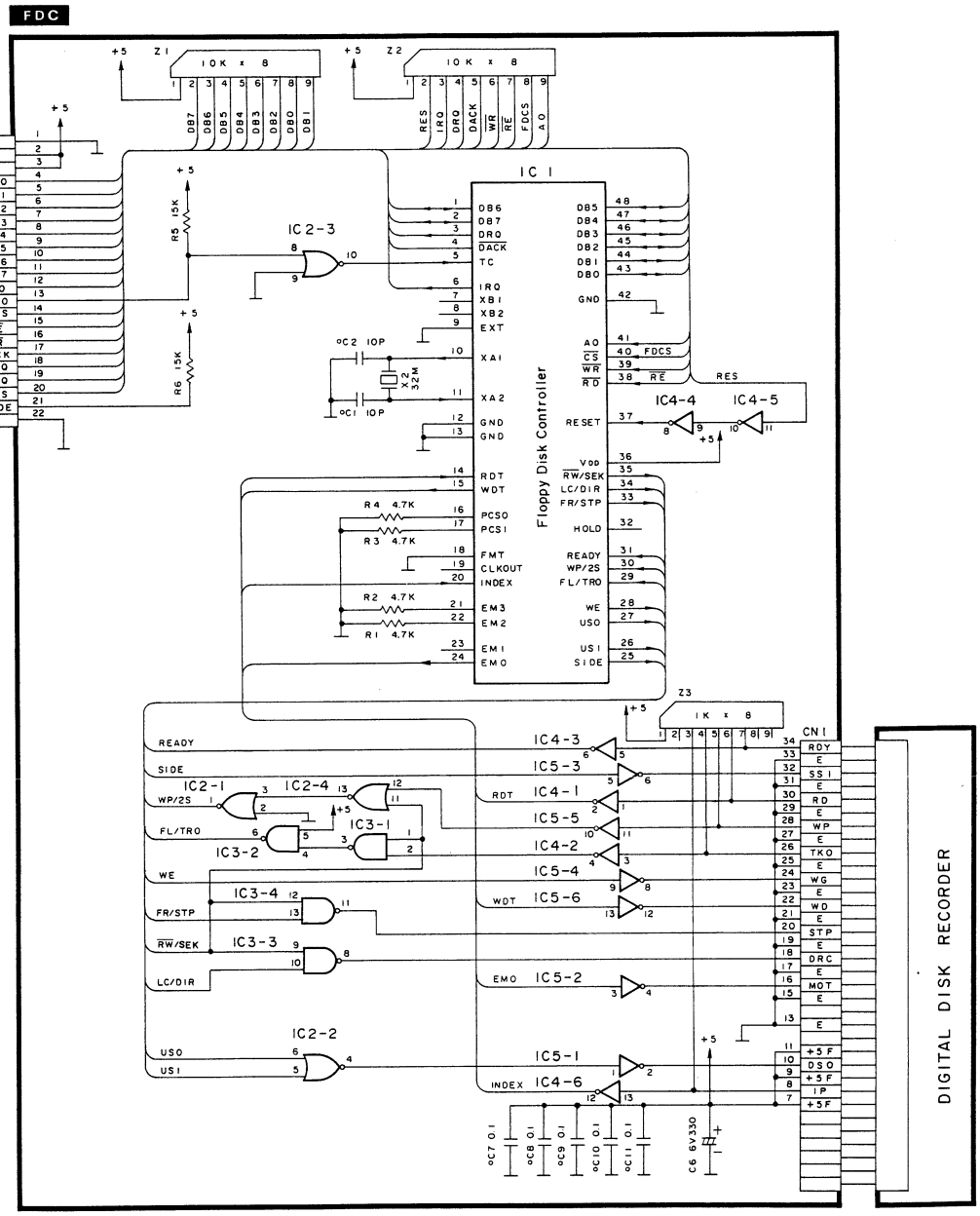

Circuit view on top of P.C.B.

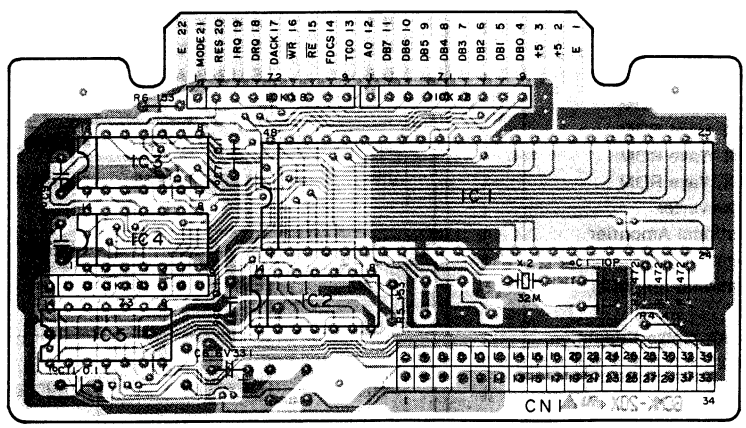

SXPG146111

NOTES:

- IC'S

IC1:	SVIGD72067C
IC2:	SVIGM74H02
IC3:	SVIGM74H00
IC4:	SVIGM74H14
IC5:	SVIGM74H04

REPLACEMENT PARTS LIST.....P.C.B. and Wiring Parts

Notes:

1. Printed circuit board assembly with mark (NLA) is no longer available after production discontinuation of the complete set.
2. The "S" mark is for a service standard part.
3. The P.C.B. part number is service standard part and may differ from production part. However, the standard P.C.B. is exchangeable to the original P.C.B. without any change.
4. Important safety notice
   Components identified by ⚠ mark have special characteristics important for safety. When replacing any of these components, use only manufacturer's specified parts.
5. ○ mark are new parts.
6. For part No. with area mark, check the area when placing an order.

■ PRINTED CIRCUIT BOARD

	NLA	Area	Part No.	Description	Per/Set
○	NLA	M XM	SXPG204351	MAIN	1
Ⓢ	NLA	Others	SXPG2043141	MAIN	1
Ⓢ	NLA		SXPG203741B	HP	1
○	NLA		SXPG142221	MIC	1
○	NLA	M MC XM	SXPG204931A	ACP	1
○	NLA	XL XR	SXPG204941A	ACP	1
○	NLA	EH	SXPG204951A	ACP	1
○	NLA	Others	SXPG204911A	ACP	1
Ⓢ	NLA		SXPG2037191A	AS	1
○	NLA		SXPG204721	PC	1
	NLA		SXPG146041	DRV	1
○	NLA		SXPG204511B	CPR	1
○	NLA		SXPG204911B	FDCN	1
○	NLA		SXPG204511A	CPL	1
○	NLA		SXPG205211	CPSQ	1
	NLA		SXPG203811A	MKB1	1
	NLA		SXPG203811B	MKB2	1
	NLA		SXPG146111	FDC	1

MAIN MAIN CIRCUIT

	Ref. No.	Part No.	Description	Per/Set
	INTEGRATED CIRCUITS			
	IC1	SVIGD70320GJ	16 bit Microcomputer	1
	IC2	SVIGMB621407	Gate Array	1
	IC3	SVIGMSM6253	A/D Converter	1
○	IC5	QSIGBR35AX0	2M bit Programmed EP ROM	1
	IC6, 7	SVIGM5256BLL	256K bit Static RAM	2
○	IC8	QSIGH3C04C44	4M bit ACCOMP Pattern ROM	1
	IC9	SVIGTLP513	Photo Coupler	1
	IC10	SVIGM74LS07	Hex Buffers (O.C.)	1
	IC11	SVIGTC40H004	Hex Inverters	1
	IC12	MN73012PGC	Tone Generator LSI 1	1
	IC13	MN73013PGD	Tone Generator LSI 2	1
	IC14	SVIGHM65256	256K bit Pseudo Static RAM	1
	IC15	QSIGH3C08C26	8M bit Wave ROM	1
	IC16	QSIGH3C08C45	8M bit Wave ROM	1
	IC17	QSIGH3C08C71	8M bit Wave ROM	1
○	IC18	QSIGU3C08026	8M bit Wave ROM	1
	IC19	QSIGU3C04145	4M bit Wave ROM	1
	IC20	SVIGPCM54	D-A Converter	1
	IC21	SVIGM5238L	Operational Amplifier	1
	IC22, 23	SVIGT74H4051	8-channel Multiplexer	2
	IC24, 25, 27, 30, 31	SVIGM5218L	Operational Amplifier	5
	IC28	SVIGLM1894N	Dynamic Noise Reduction	1
	IC33, 35	SVIGTC40H032	Quad 2-input OR Gates	2
	IC34	SVIGTC40H000	Quad 2-input NAND Gates	1

	Ref. No.	Part No.	Description	Per/Set
	TRANSISTORS			
S	Q1, 2, 6	2SC2320LFG	2SC1310FG (SUB. Part)	3
S	Q3~5, 7, 14	2SA1015-GR	2SA933STRS (SUB. Part)	5
○	Q8, 9 M XM	2SA1643		2
	Q10, 12	2SC3940ARS		2
	Q11, 13	2SA1534ARS		2
	Q15, 18	2SC1047C		2
	DIODES			
	D1, 4~13, 19, 20	MA165TA5		13
	D2	MA4062	Zener, 6.2V	1
	D3	EK04		1
	D14	MA4056	Zener, 5.6V	1
	D17, 18	MA4051MTA	Zener, 5.1V	2
	OSCILLATORS			
	X1	QSXG1A1400A	14MHz, Quartz Oscillator	1
	X2	QSXG1B4000A	40MHz, Quartz Oscillator	1
	COMPONENT COMBINATIONS			
	Z1, 2	EXBPI8472JM	4.7KΩ×8	2
	Z3	EXAMR14A1002	1KΩ/2KΩ, Ladder Network	1
	Z4	EXBM16V221JA	220Ω×8	1
	COILS			
	L1~5, 15, 16	QLQGT1B600MA	Coil	21
	L7, 14, 20, 22	QLQGT1B600MA	Coil	4
	L8~12, 17~19, 21	SLQG15W34DPQ	Coil	9
	JACKS			
	JK1	QJSG002AA	Pedal IN	1
	JK2~4	SJSG1370A	MIDI (THRU, OUT, IN)	3
	JK6~9	SJJG400A	AUX IN, LINE OUT	4
	VARIABLE RESISTOR			
	VR1	EVJ01PF25B55	500KΩ B, TUNE	1
	SEMI-FIXED RESISTOR			
	VR2	EVND4AA00B14	10KΩ B, Offset Adj.	1
	WIRES			
	W1, 2	QEXG01001RA	[M][MC][EZ][XL][XM] only	2

Ref. No.	Part No.	Description	Per/Set
RESISTORS			
R1, 2	ERDS2TJ103	10KΩ	2
R3~6	ERDS2TJ472	4.7KΩ	4
R7~10	ERDS2TJ101	100Ω	4
R11	ERDS2TJ103	10KΩ	1
R12	ERDS2TJ101	100Ω	1
R13	ERDS2TJ222	2.2KΩ	1
R14~19	ERDS2TJ103	10KΩ	6
R20	ERDS2TJ101	100Ω	1
R21	ERDS2TJ221	220Ω	1
R22	ERDS2TJ104	100KΩ	1
R23	ERDS2TJ101	100Ω	1
R26	ERDS2TJ101	100Ω	1
R27	ERDS2TJ221	220Ω	1
R28	ERDS2TJ104	100KΩ	1
R29	ERDS2TJ101	100Ω	1
R30, 31	ERDS2TJ221	220Ω	2
R32	ERDS2TJ331	330Ω	1
R33	ERDS2TJ103	10KΩ	1
R34	ERDS2TJ332	3.3KΩ	1
R35~38	ERDS2TJ103	10KΩ	4
R39	ERDS2TJ471	470Ω	1
R40	ERDS2TJ104	100KΩ	1
R41	ERDS2TJ102	1KΩ	1
R42	ERDS2TJ154	150KΩ	1
R43, 44	ERDS2TJ103	10KΩ	2
R46	ERDS2TJ102	1KΩ	1
R47, 48	ER0S2TKF1001	1KΩ, ±1%	2
R49	ERDS2TJ472	4.7KΩ	1
R50	ERDS2TJ101	100Ω	1
R51	ERDS2TJ331	330Ω	1
R55	ERDS2TJ105	1MΩ	1
R56	ERDS2TJ472	4.7KΩ	1
R57	ERDS2TJ101	100Ω	1
R58	ERDS2TJ222	2.2KΩ	1
R59	ERDS2TJ103	10KΩ	1
R60	ERDS2TJ101	100Ω	1
R61, 62	ERDS2TJ682	6.8KΩ	2
R63	ERDS2TJ152	1.5KΩ	1
R64	ERDS2TJ332	3.3KΩ	1
R65	ERDS2TJ472	4.7KΩ	1
R67, 68	ERDS2TJ102	1KΩ	2
R69	ERDS2TJ101	100Ω	1
R70	ERDS2TJ823	82KΩ	1
R71	ERDS2TJ104	100KΩ	1
R72	ERDS2TJ101	100Ω	1
R73	ERDS2TJ563	56KΩ	1
R74	ERDS2TJ184	180KΩ	1
R75	ERDS2TJ101	100Ω	1
R76	ERDS2TJ563	56KΩ	1
R77	ERDS2TJ224	220KΩ	1
R78	ERDS2TJ101	100Ω	1
R79	ERDS2TJ683	68KΩ	1
R80	ERDS2TJ124	120KΩ	1
R81	ERDS2TJ101	100Ω	1
R82	ERDS2TJ124	120KΩ	1
R83	ERDS2TJ683	68KΩ	1
R84	ERDS2TJ101	100Ω	1
R85	ERDS2TJ184	180KΩ	1
R86	ERDS2TJ563	56KΩ	1
R87	ERDS2TJ101	100Ω	1
R88	ERDS2TJ224	220KΩ	1
R89	ERDS2TJ563	56KΩ	1
R90	ERDS2TJ101	100Ω	1
R91	ERDS2TJ104	100KΩ	1
R92	ERDS2TJ823	82KΩ	1
R93, 94	ERDS2TJ334	330KΩ	2
R95	ERDS2TJ472	4.7KΩ	1

Ref. No.	Part No.	Description	Per/Set
R96	ERDS2TJ222	2.2KΩ	1
R97	ERDS2TJ472	4.7KΩ	1
R98~100	ERDS2TJ333	33KΩ	3
R101, 102	ERDS2TJ334	330KΩ	2
R103	ERDS2TJ472	4.7KΩ	1
R104	ERDS2TJ222	2.2KΩ	1
R105	ERDS2TJ472	4.7KΩ	1
R106~108	ERDS2TJ333	33KΩ	3
R109, 110	ERDS2TJ471	470Ω	2
R116	ERDS2TJ184	180KΩ	1
R117	ERDS2TJ104	100KΩ	1
R118, 119	ERDS2TJ474	470KΩ	2
R120	ERDS2TJ184	180KΩ	1
R121	ERDS2TJ104	100KΩ	1
R122, 123	ERDS2TJ331	330Ω	2
R124	ERDS2TJ681	680Ω	1
R125, 126	ERDS2TJ472	4.7KΩ	2
R127, 128	ERDS2TJ473	47KΩ	2
R132	ERDS2TJ473	47KΩ	1
R134	ERDS2TJ334	330KΩ	1
R135	ERDS2TJ124	120KΩ	1
R137	ERDS2TJ473	47KΩ	1
R138	ERDS2TJ124	120KΩ	1
R139	ERDS2TJ334	330KΩ	1
R149	ERDS2TJ684	680KΩ	1
R150	ERDS2TJ224	220KΩ	1
R151	ERDS2TJ334	330KΩ	1
R152	ERDS2TJ220	22Ω	1
R153	ERDS2TJ331	330Ω	1
R154	ERDS2TJ103	10KΩ	1
R155	ERDS2TJ684	680KΩ	1
R156	ERDS2TJ334	330KΩ	1
R157	ERDS2TJ224	220KΩ	1
R158	ERDS2TJ220	22Ω	1
R159	ERDS2TJ222	2.2KΩ	1
R160, 161	ERDS2TJ102	1KΩ	2
R162	ERDS2TJ222	2.2KΩ	1
R163, 164	ERDS2TJ332	3.3KΩ	2
R169, 170	ERDS2TJ104	100KΩ	2
R171, 172 ⚠	ERX1ANJPR22S	0.22Ω, 1W, Flame-Proof	2
M XM			
R173 M XM	ERDS2TJ822	8.2KΩ	1
R174 M XM	ERDS2TJ102	1KΩ	1
R175 M XM	ERDS2TJ151	150Ω	1
R176 ⚠	ERD2FCJ4R7	4.7Ω, 1/4W, Fuse Type	1
R178	ERDS2TJ221	220Ω	1
R179	ERDS2TJ222	2.2KΩ	1
R180	ERDS2TJ223	22KΩ	1
R181, 182	ERDS2TJ102	1KΩ	2
R183	ERDS2TJ473	47KΩ	1
R184	ERDS2TJ472	4.7KΩ	1
R185	ERDS2TJ222	2.2KΩ	1
R186	ERDS2TJ223	22KΩ	1
R187 ⚠	ERD2FCJ4R7	4.7Ω, 1/4W, Fuse Type	1
R188	ERDS2TJ471	470Ω	1
R189	ERDS2TJ684	680KΩ	1
R190	ERDS2TJ223	22KΩ	1
R191	ERDS2TJ102	1KΩ	1
R192	ERDS2TJ473	47KΩ	1
R193	ERDS2TJ472	4.7KΩ	1
R196	ERDS2TJ472	4.7KΩ	1
R197~199	ERDS2TJ103	10KΩ	3
R200	ERDS2TJ222	2.2KΩ	1
R201, 202	ERDS2TJ103	10KΩ	2
R203	ERDS2TJ334	330KΩ	1
R204	ERDS2TJ103	10KΩ	1
R205	ERDS2TJ334	330KΩ	1
R206, 207 ⚠	ERQ14AJ2R0	2Ω, 1/4W, Fuse Type	2

Ref. No.	Part No.	Description	Per/Set
CAPACITORS			
C1, 2	ECKR1E473ZV	0.047μF	2
C3	ECRR1H104ZF	0.1μF	1
C4	ECEA0JKA101	100μF, 6.3V	1
C5	ECKR1E473ZV	0.047μF	1
C6	ECEA1HKA010	1μF, 50V	1
C7	ECKR1E473ZV	0.047μF	1
C9, 10	ECKR1E473ZV	0.047μF	2
C11	EECF5R5U105	1F, 5.5V, Memory Back-up	1
C13	ECKR1E473ZV	0.047μF	1
C14, 15	ECCR1H030C	3pF	2
C16~18	ECKR1E473ZV	0.047μF	3
C20~22	ECKR1E473ZV	0.047μF	3
C23	ECRR1H104ZF	0.1μF	1
C24	ECCR1H470J	47pF	1
C25	ECCR1H680J	68pF	1
C26, 27	ECRR1H104ZF	0.1μF	2
C29	ECCR1H331J	330pF	1
C30, 31	ECCR1H101J	100pF	2
C35	ECEA0JKA470	47μF, 6.3V	1
C36	ECKR1E473ZV	0.047μF	1
C37, 38	ECCR1H220J	22pF	2
C39	ECKR1E473ZV	0.047μF	1
C40	ECEA0JKA470	47μF, 6.3V	1
C42	ECKR1E473ZV	0.047μF	1
C44	ECEA1CKN100	10μF, 16V	1
C48	ECKR1E473ZV	0.047μF	1
C50, 51	ECKR1E473ZV	0.047μF	2
C53	ECKR1E473ZV	0.047μF	1
C54~61	ECQG1H222KZ	0.0022μF	8
C62	ECCR1H470J	47pF	1
C63	ECQG1H102KZ	0.001μF	1
C64	ECCR1H471J	470pF	1
C65	ECQG1H222KZ	0.0022μF	1
C66	ECQG1H102KZ	0.001μF	1
C67, 68	ECCR1H471J	470pF	2
C69	ECCR1H680J	68pF	1
C71	ECCR1H470J	47pF	1
C72	ECCR1H471J	470pF	1
C73, 74	ECQG1H102KZ	0.001μF	2
C75	ECQG1H222KZ	0.0022μF	1
C76, 77	ECCR1H471J	470pF	2
C78	ECCR1H680J	68pF	1
C82	ECEA1CKA101	100μF, 16V	1
C83, 84	ECEA1HKA010	1μF, 50V	2
C85, 86	ECEA1CKA100	10μF, 16V	2
C87	ECEA1CKA101	100μF, 16V	1
C89	ECEA0JKA331	330μF, 6.3V	1
C90	ECEA1EKA4R7	4.7μF, 25V	1
C91	ECKR1E473ZV	0.047μF	1
C92	ECEA1CKN100	10μF, 16V	1
C93	ECEA0JKA331	330μF, 6.3V	1
C98, 99	ECEA1HKN010	1μF, 50V	2
C104	ECEA1HKN010	1μF, 50V	1
C105, 106	ECCR1H470J	47pF	2
C107	ECQG1H332KZ	0.0033μF	1
C108	ECQG1H102KZ	0.001μF	1
C109	ECRR1H104ZF	0.1μF	1
C111	ECEA1CKA470	47μF, 16V	1
C112, 113	ECQG1H472KZ	0.0047μF	2
C114	ECEA1HKA010	1μF, 50V	1
C115	ECKR1E473ZV	0.047μF	1
C116	ECEA1CKA470	47μF, 16V	1
C117	ECEA1HKA010	1μF, 50V	1
C118	ECCR1H100D	10pF	1
C120	ECCR1H100D	10pF	1
C122, 123	ECCR1H220J	22pF	2

Ref. No.	Part No.	Description	Per/Set
C127	ECRR1H104ZF	0.1μF	1
C130, 131	ECRR1H104ZF	0.1μF	2
C132	ECEA1HKA010	1μF, 50V	1
C134	ECEA1HKA010	1μF, 50V	1
C135	ECCR1H471J	470pF	1
C136	ECSF1EE106	10μF, 25V	1
C138, 139	ECKR1E473ZV	0.047μF	2
C142	ECKR1E473ZV	0.047μF	1
C147	EECF5R5U105	1F, 5.5V, Memory Back-up	1
C160	ECEA1CKA470	47μF, 16V	1
C203	ECEA0JKA101	100μF, 6.3V	1
C204, 205	ECRR1H104ZF	0.1μF	2
C207	ECQM1H153KV	0.015μF	1
C208	ECQM1H333KV	0.033μF	1
C209	ECQM1H153KV	0.015μF	1
C210	ECQM1H333KV	0.033μF	1

HP HEADPHONES CIRCUIT

Ref. No.	Part No.	Description	Per/Set
COIL			
L1	SLQG15W34DPQ	Coil	1
JACKS			
JK1, 2	SJJG100A	Headphones	2
WIRE			
W1	SWEG690A	[EZ][M][MC][XL][XM] only	
RESISTORS			
R1~4 ⚠	ERG1ANJP680S	68Ω, 1W, Flame-Proof	4
CAPACITORS			
C1, 2	ECCR1H331J	330pF	2
C3	ECRR1H104ZF	0.1μF	1

MIC MICROPHONE CIRCUIT

Ref. No.	Part No.	Description	Per/Set
INTEGRATED CIRCUIT			
IC1	SVIGM5218L	Operational Amplifier	1
COIL			
L1	SLQG15W34DPQ	Coil	1
JACK			
JK1	SJJG210A	Microphone	1
VARIABLE RESISTOR			
VR1	EWHD5A576B54	50KΩ B, Mic Volume	1

	Ref. No.	Part No.	Description	Per/Set
	RESISTORS			
	R1	ERDS2TJ224	220KΩ	1
	R2	ERDS2TJ103	10KΩ	1
	R3	ERDS2TJ224	220KΩ	1
	R4	ERDS2TJ103	10KΩ	1
	R5	ERDS2TJ154	150KΩ	1
	R6	ERDS2TJ102	1KΩ	1
	CAPACITORS			
	C1, 2	ECKR1E473ZV	0.047μF	2
	C3	ECEA1HKN010	1μF, 50V	1
	C4, 5	ECCR1H101J	100pF	2
	C6	ECEA1HKN010	1μF, 50V	1
	C7	ECQG1H102KZ	0.001μF	1
	C8	ECRR1H104ZF	0.1μF	1

ACP AC POWER SUPPLY CIRCUIT

	Ref. No.	Part No.	Description	Per/Set
	LINE FILTER			
	L1 ⚠	SLTGLF3	Line Filter	1
	JACK			
	JK1 XL XR ⚠	SJSD16	AC IN	1
	JK1 ⚠	SJS9236	AC IN, Other areas	1
	SWITCH			
	S1 ⚠	SSRG100A	Voltage Selector, Except for [M][MC][XM][EH]	1
	FUSES			
	F1 M MC XM ⚠	XBA1C63NU100	6.3A, 125V	1
	F2 EH ⚠	XBA2C20TB0	T2A, 250V	1
	F1 ⚠	XBA2C40TB0	T4A, 250V } Other areas	1
	F2, 3 ⚠	XBA2C20TB0	T2A, 250V } Other areas	2
	CAPACITORS			
	C1 ⚠	ECKCVA1472MF	4700pF, Line-Capacitor	1
	C2 ⚠	ECQU2A104MN	0.1μF, 250V, Across-the Line Capacitor	1

AS AMP & POWER SUPPLY CIRCUIT

	Ref. No.	Part No.	Description	Per/Set
	INTEGRATED CIRCUITS			
	IC1	SVIGS4172M2M	Power Amplifier	1
	IC2	SVIGM5291P	Switching Regulator	1
	IC3	SVIGM5F7815	+15V Voltage Regulator	1
	IC4	SVIGM5F7915	−15V Voltage Regulator	1
	TRANSISTORS			
S	Q1, 2	2SC2320LFG	2SC1310FG (SUB. Part)	2
	Q3	2SA1643		1

	Ref. No.	Part No.	Description	Per/Set
	DIODES			
S	D1, 2 ⚠	SVDGERA1502Y	Rectifier	2
	D3~10 ⚠	SVDGS3V20-15	Rectifier	8
	D11	SVDGRK14S	Diode	1
	D12	MA2062LF	Zener, 6.2V	1
	D13	MA165TA5		1
	COIL			
	L2	SLCG2A121TZ	Coil	1
	WIRE			
	W1	SWEG630A	[EZ][M][MC][XL][XM] only	1
	RESISTORS			
	R1~3	ERDS2TJ103	10KΩ	3
	R4	ERDS2TJ472	4.7KΩ	1
	R5	ERDS2TJ221	220Ω	1
	R6, 7	ERDS2TJ223	22KΩ	2
	R8	ERDS2TJ473	47KΩ	1
	R9	ERDS2TJ472	4.7KΩ	1
	R10 ⚠	ERQ14AJ2R0P	2Ω, 1/4W, Fuse Type	1
	R11 ⚠	ERX1ANJPR22S	0.22Ω, 1W, Flame-Proof	1
	R12	ERDS2TJ470	47Ω	1
	R13 ⚠	ERG1ANJP221S	220Ω, 1W, Flame-Proof	1
	R14	ER0S2TKF3571	3.57KΩ, ±1%	1
	R15	ER0S2TKF1001	1KΩ, ±1%	1
	R16 ⚠	ERD2FCG101	100Ω, 1/4W, Fuse Type	1
	R17, 18	ERDS2TJ153	15KΩ	2
	R19	ERDS2TJ681	680Ω	1
	R20	ERDS2TJ473	47KΩ	1
	R21	ERDS2TJ222	2.2KΩ	1
	R22, 23	ERDS2TJ152	1.5KΩ	2
	R24 ⚠	ERD25FVJ4R7	4.7Ω, 1/4W, Flame-Proof	1
	R25, 26	ERDS2TJ153	15KΩ	2
	R27	ERDS2TJ681	680Ω	1
	R28	ERDS2TJ473	47KΩ	1
	R29, 30	ERDS2TJ152	1.5KΩ	2
	R31	ERDS2TJ222	2.2KΩ	1
	R32~34	ERDS2TJ102	1KΩ	3
	R35	ERDS2TJ104	100KΩ	1
	R36 ⚠	ERD25FVJ4R7	4.7Ω, 1/4W, Flame-Proof	1
	R37, 38	ERDS2TJ333	33KΩ	2
	R39	ERDS2TJ682	6.8KΩ	1
	R41	ERDS2TJ221	220Ω	1
	CAPACITORS			
	C3	ECEA1VU222	2200μF, 35V	1
	C4	ECEA1VU332	3300μF, 35V	1
	C5	ECEA1VU222	2200μF, 35V	1
	C6	ECEA1VU332	3300μF, 35V	1
	C7	ECEA0JKA470	47μF, 6.3V	1
	C8	ECEA1HKA010	1μF, 50V	1
	C9	ECEA1VKG100	10μF, 35V	1
	C10	ECCR1H101J	100pF	1
	C11	ECEA0JU102	1000μF, 6.3V	1
	C12	ECKR1E473ZV	0.047μF	1
	C13	ECQV1H474JZ	0.47μF	1
	C14	ECCR1H101J	100pF	1
	C15	ECEA1EKA4R7	4.7μF, 25V	1
	C16	ECEA1EKA470	47μF, 25V	1
	C17	ECRR1H104ZF	0.1μF	1
	C18	ECQV1H474JZ	0.47μF	1
	C19	ECCR1H101J	100pF	1
	C20	ECEA1EKA4R7	4.7μF, 25V	1

Ref. No.	Part No.	Description	Per/Set
C21	ECEA1EKA470	47μF, 25V	1
C22	ECEA1VKG100	10μF, 35V	1
C23	ECRR1H104ZF	0.1μF	1
C24, 25	ECQV1H473JZ	0.047μF	2
C28	ECEA1HU330	33μF, 50V	1
C30, 31	ECEA1VKG100	10μF, 35V	2
C33	ECEA50Y22	22μF, 50V	1
C34, 35	ECEA50Y3R3	3.3μF, 50V	2
C36	ECEA50Y22	22μF, 50V	1
C37 ⚠	ECQE1A104M6	0.1μF, 125V, [EZ][M][MC][XL][XM] only	1

PC PEAK CANCELLER CIRCUIT

Ref. No.	Part No.	Description	Per/Set
COIL			
L1	SLCSC331KU	330μH	1
RESISTOR			
R1 ⚠	ERF5ZXJ150	15Ω, 5W, Flame-Proof	1
CAPACITOR			
C1	ECEA50Y6R8	6.8μF, 50V	1

DRV DIGITAL REVERB CIRCUIT

Ref. No.	Part No.	Description	Per/Set
INTEGRATED CIRCUITS			
IC1	MN1280R	Reset IC	1
IC2	SVIGHM65256	256K bit Pseudo Static RAM	1
IC3	SVIGMB622416	Gate Array	1
IC4	MN8305S	A-D/D-A Converter	1
IC5	SVIG87064075	Digital Signal Processor	1
IC6	SVIGM5278L05	+5V Voltage Regulator	1
IC7	SVIGM5220L	Operational Amplifier	1
IC8~10	SVIGM5218L	Operational Amplifier	3
IC11	SVIGLM1894N	Dynamic Noise Reduction	1
IC12	MN74HC02S	Quad 2-Input NOR Gates	1
TRANSISTORS			
Q1, 2	2SJ105GR	FET	2
DIODES			
D1~5	MA165TA5		5
D6	EK04		1
OSCILLATOR			
X1	SVQGA20MX040	20MHz, Ceramic Oscillator	1
COMPONENT COMBINATION			
ZC1	EXFP8101MW	100pF×8	1
COIL			
L1	SLQG15W34DPQ	Coil	1

Ref. No.	Part No.	Description	Per/Set
SEMI-FIXED RESISTOR			
VR1	EVND4AA00B14	10KΩ B, DRV Bias	1
RESISTORS			
R1	ERDS2TJ333	33KΩ	1
R2	ERDS2TJ682	6.8KΩ	1
R3, 4	ERDS2TJ473	47KΩ	2
R5	ERDS2TJ393	39KΩ	1
R6, 7	ERDS2TJ103	10KΩ	2
R8	ERDS2TJ473	47KΩ	1
R9	ERDS2TJ152	1.5KΩ	1
R10	ERDS2TJ563	56KΩ	1
R11	ERDS2TJ183	18KΩ	1
R12, 13	ERDS2TJ823	82KΩ	2
R14	ERDS2TJ153	15KΩ	1
R15	ERDS2TJ103	10KΩ	1
R16	ERDS2TJ472	4.7KΩ	1
R17	ERDS2TJ153	15KΩ	1
R18	ERDS2TJ103	10KΩ	1
R19	ERDS2TJ472	4.7KΩ	1
R20	ERDS2TJ682	6.8KΩ	1
R21~23	ERDS2TJ473	47KΩ	3
R24	ERDS2TJ682	6.8KΩ	1
R25~27	ERDS2TJ473	47KΩ	3
R36, 37	ERDS2TJ331	330Ω	2
R38	ERDS2TJ102	1KΩ	1
R39	ERDS2TJ221	220Ω	1
R40, 41	ERDS2TJ473	47KΩ	2
R44, 45	ERDS2TJ472	4.7KΩ	2
R46, 47	ERDS2TJ221	220Ω	2
R50~52 ⚠	ERD2FCJ4R7	4.7Ω, 1/4W, Fuse Type	3
R53, 54 ⚠	ERD2FCG100	10Ω, 1/4W, Fuse Type	2
R55	ERDS2TJ105	1MΩ	1
R58, 59	ERDS2TJ101	100Ω	2
R62~66	ERDS2TJ152	1.5KΩ	5
R68~70	ERDS2TJ472	4.7KΩ	3
R71	ERDS2TJ225	2.2MΩ	1
R72	ERDS2TJ332	3.3KΩ	1
R73, 74	ERDS2TJ225	2.2MΩ	2
R75	ERDS2TJ682	6.8KΩ	1
R76	ERDS2TJ332	3.3KΩ	1
CAPACITORS			
C1	ECQB1H153JZ	0.015μF	1
C2	ECQG1H682KZ	0.0068μF	1
C3, 4	ECCR1H471J	470pF	2
C5	ECCR1H101J	100pF	1
C6	ECEA1HKA010	1μF, 50V	1
C8	ECEA1HKA010	1μF, 50V	1
C9	ECQG1H152KZ	0.0015μF	1
C10	ECCR1H151J	150pF	1
C11	ECEA1HKA010	1μF, 50V	1
C12, 13	ECQG1H472KZ	0.0047μF	2
C14, 15	ECCR1H471J	470pF	2
C16	ECCR1H101J	100pF	1
C17	ECEA1HKA010	1μF, 50V	1
C18, 19	ECQG1H472KZ	0.0047μF	2
C20, 21	ECCR1H471J	470pF	2
C22	ECCR1H101J	100pF	1
C31, 32	ECEA1HKA010	1μF, 50V	2
C33	ECEA1HKAR22	0.22μF, 50V	1
C34	ECQB1H103JZ	0.01μF	1
C35	ECEA1HKAR22	0.22μF, 50V	1
C36	ECQB1H103JZ	0.01μF	1
C37	ECQV1H473JZ	0.047μF	1
C38	ECQV1H104JZ	0.1μF	1

Ref. No.	Part No.	Description	Per/Set
C39	ECQB1H103JZ	0.01μF	1
C40	ECQG1H332KZ	0.0033μF	1
C41	ECEA1CKA470	47μF, 16V	1
C42	ECEA1CKA100	10μF, 16V	1
C43	ECEA1CKA470	47μF, 16V	1
C50~52	ECEA0JKA101	100μF, 6.3V	3
C53	ECEA0JU102	1000μF, 6.3V	1
C54	ECEA0JU331	330μF, 6.3V	1
C55, 56	ECEA1CKA101	100μF, 16V	2
C57	ECCR1H101J	100pF	1
C58, 59	ECCR1H100D	10pF	2
C60	ECKR1E473ZV	0.047μF	1
C62, 63	ECKR1E473ZV	0.047μF	2
C65, 66	ECCR1H470J	47pF	2
C67	ECRR1H104ZF	0.1μF	1
C68	ECEA1HKN010	1μF, 50V	1
C69	ECEA1HKA010	1μF, 50V	1
C70, 71	ECCR1H101J	100pF	2
C72	ECKR1E473ZV	0.047μF	1
C73	ECRR1H104ZF	0.1μF	1
C100	ECRR1H104ZF	0.1μF	1

CPR CONTROL PANEL RIGHT CIRCUIT

Ref. No.	Part No.	Description	Per/Set
INTEGRATED CIRCUITS			
IC1	SVIGM603A121	Gate Array	1
IC2~5	SVIGM74LS07	Hex Buffers (O.C.)	4
TRANSISTORS			
Q1~4	2SA830SB		4
DIODES			
D1~43, 45, 47~49	MA165TA5		47
D50~77, 84, 87, 89~94, 96~102, 105	LN282R	LED (Red)	44
D78~83, 85, 86, 88, 104	LN382G	LED (Green)	10
DISPLAY			
LD1	LB603VF	Triple 8 Segments Display	1
SWITCHES			
S1~43, 45, 47, 48	SSHG1046A	Push switch	46
IC PROTECTOR			
○ IP1	ICP-N10T104		1
RESISTORS			
R1	ERDS2TJ102	1KΩ	1
R2	ERDS2TJ184	180KΩ	1
R3	ERDS2TJ221	220Ω	1
R4	ERDS2TJ103	10KΩ	1
R5	ERDS2TJ152	1.5KΩ	1
R6~17	ERDS2TJ103	10KΩ	12
R18~39	ERDS2TJ470	47Ω	22

Ref. No.	Part No.	Description	Per/Set
CAPACITORS			
C1	ECEA0JKA101	100μF, 6.3V	1
C2	ECRR1H104ZF	0.1μF	1
C3, 4	ECCR1H101J	100pF	2
C5	ECEA1HKA010	1μF, 50V	1
C6~8	ECRR1H104ZF	0.1μF	3

FDCN FD CONNECTOR CIRCUIT

Ref. No.	Part No.	Description	Per/Set
COMPONENT COMBINATIONS			
Z1	EXBPI8472JM	4.7KΩ×8	1
ZC1, 2	EXFP8470MW	47pF×8	2
COILS			
L1	SLQG15W33AP	Coil	1
L2, 3	SLQG10W10D1P	Coil	2
WIRE			
W1	SWEG640A		1
CAPACITOR			
C1	ECRR1H104ZF	0.1μF	1

CPL CONTROL PANEL LEFT CIRCUIT

Ref. No.	Part No.	Description	Per/Set
INTEGRATED CIRCUITS			
IC1	SVIGM603A121	Gate Array	1
IC2, 3	SVIGM74LS07	Hex Buffers (O.C.)	2
TRANSISTORS			
Q1~4	2SA830SB		4
DIODES			
D1~45	MA165TA5		45
D46~77	LN282R	LED (Red)	32
SWITCHES			
S1~24	SSHG1046A	Push switch	24
S25~29	SSSG1011A	Balance	5
IC PROTECTOR			
○ IP1	ICP-N10T104		1
VARIABLE RESISTOR			
VR1	EVD06510B24G	20KΩ B, Main Volume	1
RESISTORS			
R1	ERDS2TJ102	1KΩ	1
R2	ERDS2TJ184	180KΩ	1
R3	ERDS2TJ221	220Ω	1
R4	ERDS2TJ103	10KΩ	1
R5	ERDS2TJ152	1.5KΩ	1
R6~17	ERDS2TJ103	10KΩ	12
R18~28	ERDS2TJ470	47Ω	11

Ref. No.	Part No.	Description	Per/Set
CAPACITORS			
C1	ECEA0JKA101	100μF, 6.3V	1
C2	ECRR1H104ZF	0.1μF	1
C3, 4	ECCR1H101J	100pF	2
C5	ECEA1HKA010	1μF, 50V	1
C6~8	ECRR1H104ZF	0.1μF	3

CPSQ SEQUENCER CONTROL CIRCUIT

Ref. No.	Part No.	Description	Per/Set
INTEGRATED CIRCUITS			
IC1, 2	SVIGM74LS07	Hex Buffers (O.C.)	2
DIODES			
D1, 2, 13~25, 29~33	LN282R	LED (Red)	20
D3~12, 26, 28, 34~36	LN382G	LED (Green)	15
D37~50, 52~56	MA165TA5		19
SWITCHES			
S37~50, 52~56	SSHG1049A	Push Switch	19
RESISTORS			
R1~9	ERDS2TJ470	47Ω	9
CAPACITOR			
C1	ECRR1H104ZF	0.1μF	1

MKB1 MANUAL KEYBOARD 1 CIRCUIT

Ref. No.	Part No.	Description	Per/Set
INTEGRATED CIRCUITS			
IC1	MN50020PGV	Gate Array	1
IC2	MN1231	1K bit Programmable ROM	1
DIODES			
S D1~88	MA162A	MA150IR (SUB. Part)	88
OSCILLATOR			
X1	EF0FC4004A3	4MHz, Ceramic Oscillator	1
RESISTORS			
R1	ERDS2TJ101	100Ω	1
R2	ERDS2TJ103	10KΩ	1
R3	ERDS2TJ222	2.2KΩ	1
R4	ERDS2TJ472	4.7KΩ	1
CAPACITORS			
C1	ECCR1H681J	680pF	1
C2	ECRR1H104ZF	0.1μF	1
C3	ECCR1H681J	680pF	1
C4	ECEA0JKA470	47μF, 6.3V	1
C5	ECRR1H104ZF	0.1μF	1

MKB2 MANUAL KEYBOARD 2 CIRCUIT

Ref. No.	Part No.	Description	Per/Set
DIODES			
S D89~176	MA162A	MA150IR (SUB. Part)	88
COMPONENT COMBINATION			
Z1	EXBPI8472JM	4.7KΩ×8	1

FDC FD CONTROL CIRCUIT

Ref. No.	Part No.	Description	Per/Set
INTEGRATED CIRCUITS			
IC1	SVIGD72067C	Floppy Disk Controller	1
IC2	SVIGM74H02	Quad 2-input NOR Gates	1
IC3	SVIGM74H00	Quad 2-input NAND Gates	1
IC4	SVIGM74H14	Hex Schmitt-trigger Inverters	1
IC5	SVIGM74H04	Hex Inverters	1
OSCILLATOR			
X2	SVQG49S3200T	32MHz,Quartz Oscillator	1
COMPONENT COMBINATIONS			
Z1, 2	EXBPI8103JM	10KΩ×8	2
Z3	EXBPI8102JM	1KΩ×8	1
RESISTORS			
R1~4	ERDS2TJ472	4.7KΩ	4
R5, 6	ERDS2TJ153	15KΩ	2
CAPACITORS			
C1, 2	ECBA1H100J	10pF	2
C6	ECEA0JKA331	330μF, 6.3V	1
C7~11	ECRR1H104ZF	0.1μF	5

■ WIRING PARTS

Ref. No.	Part No.	Description	Per/Set
○ W1	QEXG06011ZA	Connector with Wire	1
W2	QEXG03017ZA	Connector with Wire	1
W3	SWKG0874SSA	Connector with Wire	1
○ W4	QEXG03027ZA	Connector with Wire	1
○ W5	QEXG09010ZA	Connector with Wire	1
○ W6	QEXG07003SSA	Connector with Wire	1
○ W7	QEXG10006SSA	Connector with Wire	1
W8	SWKG04103SSB	Connector with Wire	1
○ W9	QEXG15008SSA	Connector with Wire	1
W10	QEXG13005SSA	Connector with Wire	1
W11	SWKG1516SSA	Connector with Wire	1
○ W12	QEXG03026LTA	Connector with Wire	1
○ W13	QEXG16008SSA	Connector with Wire	1
○ W14	QEXG11007SSA	Connector with Wire	1
○ W15	QEXG13001SSA	Connector with Wire	1
W16	SWKG151SSA	Connector with Wire	1
○ W17	QEXG06012ZA	Connector with Wire	1
○ W18	QEXG05019STA	Connector with Wire	1
○ W19	QEXG06010SSA	Connector with Wire	1

EXPLODED VIEWS OF CABINET

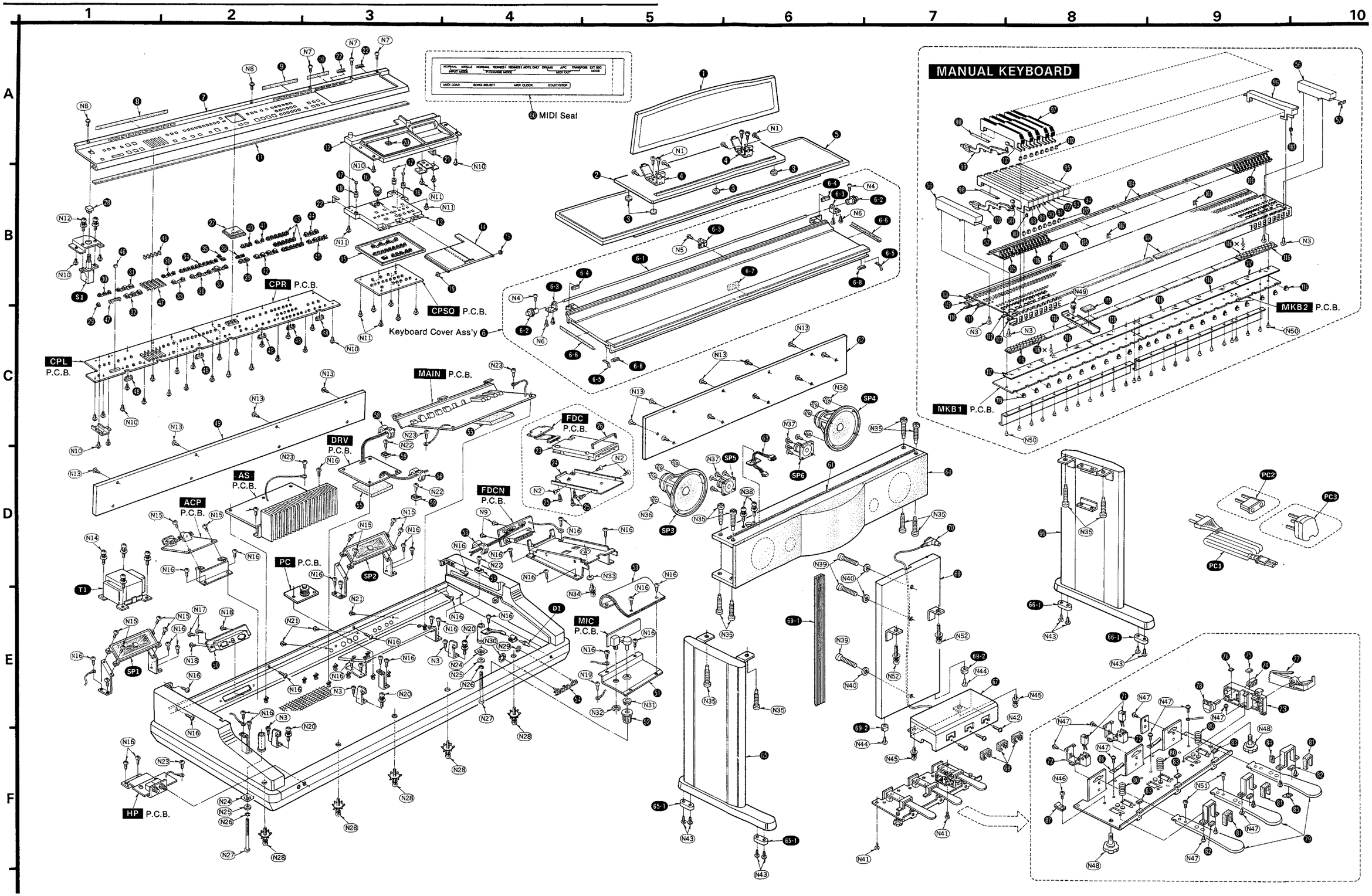

REPLACEMENT PARTS LIST.....Cabinet and Chassis Parts

Notes:

1. Important safety notice
   Components identified by ⚠ mark have special characteristics important for safety. When replacing any of these components, use only manufacturer's specified parts.
2. ○ mark are new parts.
3. For part No. with area mark, check the area when placing an order.

■ CABINET & CHASSIS PARTS

	Ref. No.	Part No.	Description	Per/Set
	SWITCH			
	S1 ⚠	SSHG1050A	Power Switch	1
	SPEAKERS			
	SP1, 2	EAS15S09A	13cm×6cm, 8Ω	2
	SP3, 4	SASG16PL03-F	16cm, 8Ω	2
	SP5, 6	EAS65PH31A	6.5cm, 8Ω	2
	TRANSFORMERS			
	T1 M XM ⚠ MC	SLTG5N43	Power Transformer	1
	T1 Others ⚠	SLTG5N38	Power Transformer	1
	POWER CORD & PLUG			
	PC1 EK XS ⚠ XD	SJAG39	AC Power Cord	1
	PC1 EH ⚠	SJAG41	AC Power Cord	1
	PC1 XL XR ⚠	SJAG61	AC Power Cord	1
	PC1 M XM ⚠ MC	SJAG62	AC Power Cord	1
	PC1 Others ⚠	SJAG65	AC Power Cord	1
	PC2 X ⚠	SJP5213-1	Attachment Plug, [X] only	1
	PC3 XD ⚠	SJPG1350A	Power Plug, [XD] only	1
	DIODE			
	D1	LN29RP	Power Indicator (LED)	1
	CABINET PARTS			
○	1	QGAG1010AA	Music Rack	1
○	2	QGAG1011AA	Music Rack Stand	1
○	3	QMGG011AA	Pad	6
	4	SBLG51A	Stay	2
○	5	QKQGA029AA	Top Cover	1
○	6	QKQGF004BA	Keyboard Cover Ass'y	1
○	6-1	QMQG0001IA	Axletree	1
○	6-2	QMRG7014AA	Gear	2
	6-3	STPG7021A	Bearing	3
	6-4	QMFG1029AA	Felt	2
	6-5	SHSG4570A	Felt	2
○	6-6	QMFG4039AA	Felt	2
	6-7	SHSG5240A	Felt	1
	6-8	SHGG1052A	Cushion	2
○	7	QGPG0014AD	Control Panel	1
○	8	QMFG4028AA	Net	1
○	9	QMFG4029AA	Net	1
○	10	QMFG4030AA	Net	1
	11	SHSG3430A	Felt	1
○	12	QGPG0015AB	Subpanel Frame	1
○	13	QGPG0016AF	Subpanel	1
○	14	QGPG0017AA	Subpanel Cover	1
○	15	QGUG1076AA01	Button Ass'y	1
○	16	RDG5782ZB	Gear	1
○	17	RMS0123	Pin	3
○	18	QMRG7013AA	Roller	3
○	19	QMRG7012AA	Roller	2
○	20	QMFG4033AA	Felt	1
	21	QMFG1026AA	Felt	1
○	22	QMFG4032AA	Felt	3
	23	SFDG30A	Digital Disk Recorder	1
	24	SUVG1281A	Cover	1
	25	SHRG9850A	P.C.B. Holder	3
○	26	QMFG1051AA	Felt	1
○	27	QGPG0019AA	LED Panel	1
	28	QGUG1040AA	Button, Power Switch	1
○	29	QGUG1059AA	Button	1
○	30	QGUG1060AA	Button	2
○	31	QGUG1061AA	Button	1
○	32	QGUG1062AA	Button	1
○	33	QGUG1063AA01	Button	1
○	34	QGUG1064AA	Button	1
○	35	QGUG1065AA	Button	1
○	36	QGUG1066AA	Button	1
○	37	QGUG1067AA01	Button	1
○	38	QGUG1068AA01	Button	1
○	39	QGUG1069AA01	Button	1
○	40	QGUG1070AA	Button	1
○	41	QGUG1071AA	Button	1
○	42	QGUG1072AA01	Button	1
○	43	QGUG1073AA	Button	3
○	44	QGUG1074AA	Button	1
○	45	QGUG1075AA	Button	1
	46	SBNG7050A	Knob	6
	47	SGEG260A	Ornament	6
○	48	QMGG010AA	Spacer	5
○	49	QKQGD016AA	Rear Board	1
○	50 M XM MC EH	QGKG0019HB	Jack Panel	1
○	50 Others	QGKG0019GB	Jack Panel	1
○	51	SMKG3371B	Mic Jack Panel	1
	52	SBNG4010A	Knob	1
	53	SMCG860A	Shield Parts	1
	54	SGBG160B	Badge	1
	55	SHRGA7280A	Cushion	2
	56	SGWG2210B	End Cover Panel	2
	57	SHSG3690A	Felt	2
	58	QLZG001A	Core (M XM MC)	3
	59	SHRG1270A	Mounting Base (EZ XL)	3
○	60	QQLG021BA	MIDI Seal	1
	STAND			
○	61	QMRG5005AA	Spacer	1
○	62	QKUG1009AA	Rear Board	1
○	63	QEXG06011ZA	Connector with Wire	1
○	64	QYKG047AA	Speaker Box	1
○	65	QKQGB114AA	Left Plank Ass'y	1
	65-1	SHRG2130B	Foot	2
○	66	QKQGB116AA	Right Plank Ass'y	1
	66-1	SHRG2130B	Foot	2
○	67	QKQGM009AA	Pedal Box Ass'y	1

	Ref. No.	Part No.	Description	Per/Set
○	68	QGKG0036AA	Ornament	3
○	69	QKQGN196AA	Plank	1
○	69-1	SGXG2463A	Cord Cover	1
○	69-2	QMRG7018AA	Foot	2
○	70	QJLG002AB	Pedal Cord	1
	71	SRDSMLS-2	Switch	2
	72	QMWG8005AB	Switch Cover	2
	73	STBG9330A	Housing	1
	74	STBG9340A	Gear	1
	75	SHSG3510A	Felt	1
	76	SHSG5980A	Felt	1
	77	STBG9350A	Lever	1
	78	QRVG16A01B53	Variable Resistor, 5KΩ B	1
	79	STBG3115A	Pedal Arm	3
	80	SUSG441A	Spring	3
	81	SHSG2750A	Felt	3
	82	SHSG2770A	Felt	3
	83	SHSG2790A	Felt	3
	84	SHSG3560A	Felt	1
	85	QMFG1041A	Felt	1
	86	SUWG219	Binder	2
	87	SHRG1130A	Cord Clamper	1
			MANUAL KEYBOARD	
	88	STBGA1050A	White Key (First Octave A Key)	1
	89	STBGA1060A	White Key (B Key)	8
	90	STBGA1070A	White Key (C Key)	7
	91	STBGA1080A	White Key (D Key)	7
	92	STBGA1090A	White Key (E Key)	7
	93	STBGA1100A	White Key (F Key)	7
	94	STBGA1110A	White Key (G Key)	7
	95	STBGA1120A	White Key (A Key)	7
	96	STBGA1130A	White Key (Top Octave C Key)	1
	97	STBG2920A	Black Key	36
	98	SUSG531A	Spring	88
	99	QMWG9006AA	Hammer (Black Key)	36
	100	QMWG9005AA	Hammer (White Key)	52
	101	SHGG9121A	Rubber Cap (Hammer)	88
	102	SHRG9900B	Key Guide Rubber	88
	103	SHSG5910A	Felt	52
	104	QMFG4021AA	Felt	2
	105	QMWG8004AB	Fulcrum (4 pcs. on one)	1
	106	QMWG8003AB	Fulcrum (12 pcs. on one)	7
	107	QMFG1036AA	Felt	3
	108	SHRGA9080A	Sponge	2
	109	QMFG1046AA	Felt	2
	110	SHSG3461A	Felt	1
	111	QMFG1049AA	Felt	2
	112	SHSG2670A	Felt	1
	113	SHSG3552A	Felt	2
	114	SHSG3451A	Felt	2
	115	SHRG7301A	Sponge	1
	116	QMWG6001AA	Actuater	11
	117	QMWG6003AA	Membrane Sheet	2
	118	QMWG6002AA	Membrane Sheet	4
	119	SHRG9751A	P.C.B. Holder	24
			SCREWS & WASHERS	
	N1	XTB35+12AFVC	Screw	8
	N2	XSS3+6FZ	Screw	4
	N3	XTB4+12A	Screw	7
	N4	XTN3+6F	Screw	2
	N5	XTV3+10C	Screw	1
	N6	XTV3+6C	Screw	4

	Ref. No.	Part No.	Description	Per/Set
	N7	XTV3+12GFZ	Screw	3
	N8	XTW3+10JFZ	Screw	2
	N9	XTW3+10Q	Screw	2
	N10	XTW3+8T	Screw	27
	N11	XTB3+12G	Screw	10
	N12	XYN3+F6FZ	Screw with Washer	2
	N13	XTT4+25AFVC	Screw	14
	N14	XYN4+F30FZ	Screw with Washer	4
	N15	XTB3+10B	Screw	10
	N16	XTB35+12A	Screw	37
	N17	XTB3+14GFVC	Screw	2
	N18	XTW3+6LFVC	Screw	2
	N19	SNEG2660A	Screw	1
	N20	XYN5+F20	Screw with Washer	3
	N21	XTW3+10JFVC	Screw	3
	N22	XTB3+10A	Screw } M XM MC	3
	N23	SNEG2660A	Screw } EZ XL	4
	N24	SNEG150B	Washer	2
	N25	QHWG001AA	Washer	2
	N26	XWA5BFZ	Washer	2
○	N27	QHDG012AB	Screw	2
○	N28	QHDG007AB	Screw with Washer	5
	N29	SNEG1770A	Retaining Ring	1
	N30	SNEG1780A	Retaining Ring	1
	N31	SNE4021-1	Nut	1
	N32	XNS12FZ	Nut	1
	N33	XWG4G16	Washer	1
	N34	XYN4+F12	Screw with Washer	1
○	N35	QHDG009AA	Screw Bolt (Brown)	12
	N36	SNE499-1	Nut	8
	N37	XTT4+12A	Screw	8
	N38	QHDG004AA	Screw	2
	N39	SNEG1820B	Screw Bolt (Black)	3
	N40	XWG6F13FZ	Washer	3
	N41	XTB35+14A	Screw	2
	N42	XYN4+F16FZ	Screw with Washer	3
	N43	XTW3+16JFZ	Screw	8
	N44	XTB4+30A	Screw	2
	N45	XYN4+F10FZ	Screw with Washer	2
	N46	XTB3+6C	Screw	1
	N47	XTW3+8C	Screw	13
	N48	SNEG1491A	Thumb Screw	2
	N49	XYN5+C6FZ	Screw with Washer	1
	N50	XTW3+10T	Screw	25
	N51	XSN4+8	Screw	2
	N52	XYN4+F16FVC	Screw with Washer	2

PACKING

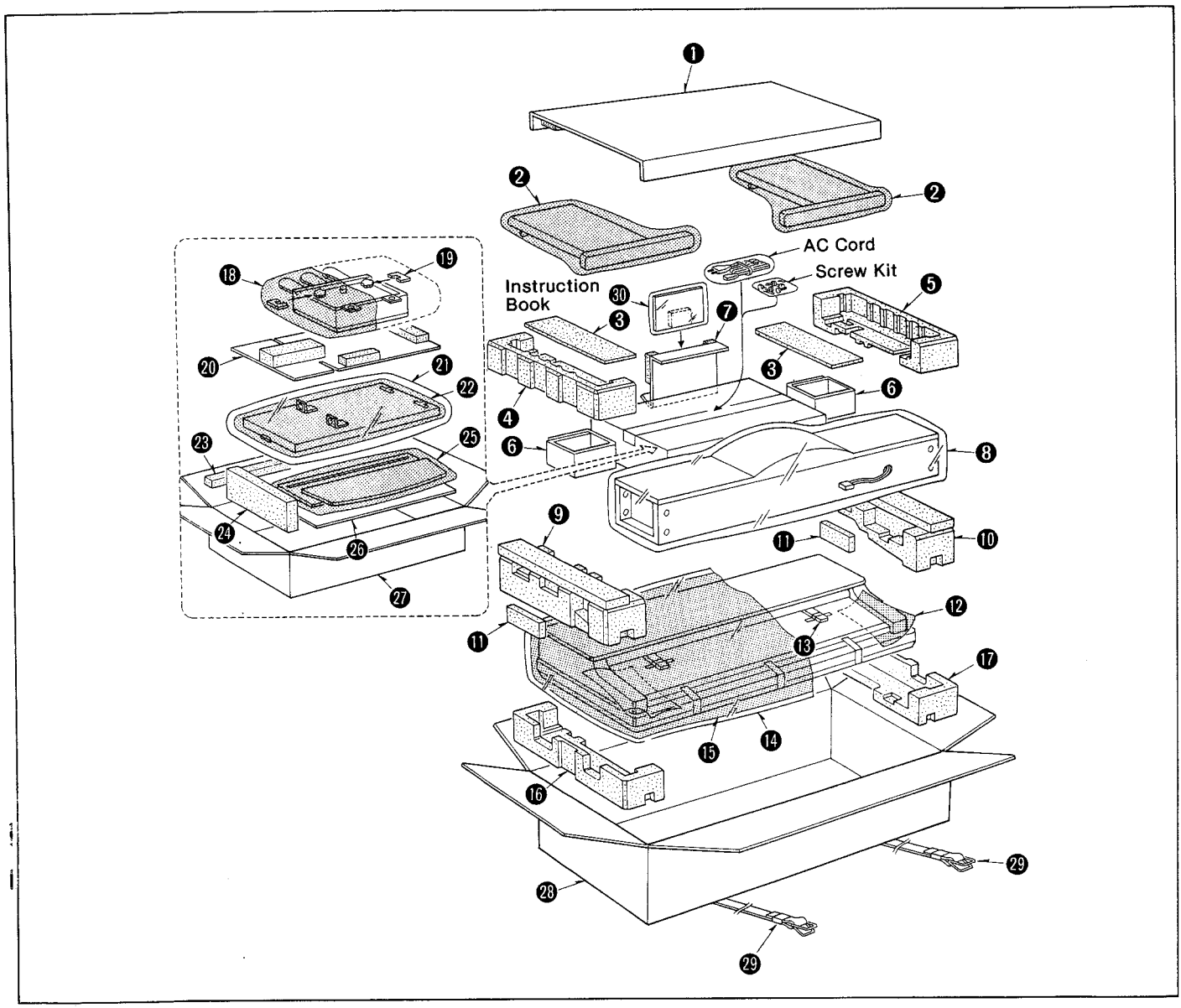

■ PACKING PARTS

	Ref. No.	Part No.	Description	Per/Set
○	1	QPNG0150AA	Top Cardboard	1
○	2	QPFG014AA	Protection Bag	2
○	3	QPNG0134AA	Spacer	2
○	4	QPNG0124AA	Pad (Upper, Left)	1
○	5	QPNG0125AA	Pad (Upper, Right)	1
○	6	QPGG0081AA	Spacer	2
○	7	QPNG0169AA	Spacer	1
	8	SPHG1570A	Polyethylene Bag	1
○	9	QPNG0156AA	Pad (Center, Left)	1
○	10	QPNG0157AA	Pad (Center, Right)	1
○	11	QPNG0158AA	Spacer	2
	12	QPHG018AA	Protection Sheet	2
	13	QPHG019AA	Spacer	2
	14	QPFG008AA	Polyethylene Bag	1
○	15	QPFG015AA	Protection Sheet	1
○	16	QPNG0128AA	Pad (Lower, Left)	1
○	17	QPNG0133AA	Pad (Lower, Right)	1
	18	SPHG1740A	Protection Sheet	1
	19	SPNG5161A	Spacer	2
○	20	QPNG0151AA	Pad (Pedal Box)	1

	Ref. No.	Part No.	Description	Per/Set
	21	SPHG2050A	Polyethylene Bag	1
	22	QPHG1580A	Protection Sheet	1
○	23	QPNG0154AA	Pad	1
○	24	QPNG0155AA	Pad	1
	25	SPHG2240A	Protection Sheet	1
○	26	QPGG0083AA	Cardboard	1
○	27	QPGG0082AA	Carton	1
○	28	QPGG0080AA	Carton	1
	29	SPSG40A	Band	2
	INSTRUCTION BOOK			
○	30 EN	QQFGPR250AA	Instruction Book	1
○	30 M	QQFGPR250CA	Instruction Book	1
○	30 EZ	QQFGPR250EA	Instruction Book	1
○	30 EW	QQFGPR250FA	Instruction Book	1
○	30 EF EH	QQFGPR250GA	Instruction Book	1
○	30 Others	QQFGPR250DA	Instruction Book	1